PRODUCT-DETAILS

RHE T1-T2-T3 STAND. RETURNED

RHE T1-T2-T3 STAND. RETURNED

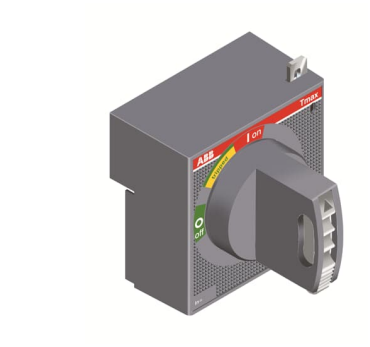

General Information

Extended Product Type	RHE T1-T2-T3 STAND. RETURNED
Product ID	1SDA051383R1
EAN	8015644518042
Catalog Description	RHE T1-T2-T3 STAND. RETURNED
Long Description	ROTARY HANDLE OPERATING MECHANISM STANDARD FOR COMPARTMENT DOOR ADJUSTABLE DEPTH WITH PADLOCK DEVICE AND DOOR INTERLOCK T1-T2-T3

Ordering

EAN	8015644518042
Minimum Order Quantity	1 piece
Customs Tariff Number	85389099

Dimensions

Product Net Weight	0.684 kg

Container Information

Package Level 1 Units	1 piece
Package Level 1 Width	125 mm
Package Level 1 Height	120 mm

Package Level 1 Depth / Length	485 mm
Package Level 1 Gross Weight	0.684 kg
Package Level 1 EAN	8015644518042

Additional Information

Color	Grey
Configuration Type	Loose or configurable
Device	T1-T2-T3
Product Main Type	Accessories for Tmax T
Product Name	Accessory
Product Type	ACC
Standards	IEC
Suitable For	T1, T2, T3
Suitable for Product Class	SACE Tmax T

Certificates and Declarations (Document Number)

Data Sheet, Technical Information	1SDC210015D0201
Declaration of Conformity - CE	1SDL000165R0001
Environmental Information	1SDL000140R0
Instructions and Manuals	ITSCE-RH0011617
RoHS Information	1SDL000200R0001

Classifications

ETIM 6	EC000229 - Handle for power circuit breaker
ETIM 7	EC000229 - Handle for power circuit breaker
Object Classification Code	Q
UNSPSC	39120000
WEEE Category	5. Small Equipment (No External Dimension More Than 50 cm)

Where Used (as a spare part for "Products")

Identifier	Description	Quantity	Unit Of Measure
3HAC020536-014	No Description Available	1	piece

Product specific part data

Product	Robotics Part Category	Robot Design Year
3HAC020536-014	Process Module	IRC5 M2004

Categories

Low Voltage Products and Systems → Circuit Breakers → Moulded Case Circuit Breakers → Accessories for Tmax T

Robotics → Controllers → IRC5 → IRC5 Single