SV-SMT 7.62HP/03/90G SC/8 2.6SN BX

Weidmüller Interface GmbH & Co. KG
Klingenbergstraße 26
D-32758 Detmold
Germany

www.weidmueller.com

OMNIMATE Power BV / SV 7.62HP Hybrid – for power, signals and EMC
Three functions in one!
The OMNIMATE Power Hybrid connector provides developers and users with the perfect three-in-one solution.
This hybrid motor connector simultaneously unites power, signals and pluggable EMC shield support. Thus you save space on the PCB, on the outer side of the housing, and in the electrical cabinet. The self-snapping one-handed interlock mechanism requires only one plugging step and thus speeds up installation and maintenance procedures. It is easy to handle and interlocks automatically – even in difficult installation positions. The unique shielding shape and slender 30° wire entry enable a space savings of up to 10 cm between rows.

General ordering data

Version	PCB plug-in connector, male header, closed side, THT/THR solder connection, 7.62 mm, Number of poles: 3, Solder pin length (l): 2.6 mm, tinned, black, Box
Order No.	2529070000
Type	SV-SMT 7.62HP/03/90G SC/8 2.6SN BX
GTIN (EAN)	4050118673135
Qty.	48 pc(s).
Product data	IEC: 1000 V / 41 A UL: 300 V / 33 A
Packaging	Box

SV-SMT 7.62HP/03/90G SC/8 2.6SN BX

Weidmüller Interface GmbH & Co. KG
Klingenbergstraße 26
D-32758 Detmold
Germany

www.weidmueller.com

Technical data

Dimensions and weights

Depth	28.3 mm	Depth (inches)	1.114 inch
Height of lowest version	11.4 mm	Net weight	3.5 g

System specifications

Product family	OMNIMATE Power - series BV/SV 7.62HP	Type of connection	Board connection
Mounting onto the PCB	THT/THR solder connection	Pitch in mm (P)	7.62 mm
Pitch in inches (P)	0.3 inch	Number of poles	3
Number of solder pins per pole	2	Solder pin length (l)	2.6 mm
Solder pin length tolerance	+0.1 / -0.3 mm	Solder pin dimensions	0.8 x 1.0 mm
Solder eyelet hole diameter (D)	1.4 mm	Solder eyelet hole diameter tolerance (D)	+ 0,1 mm
L1 in mm	15.24 mm	L1 in inches	0.6 inch
Pin series quantity	1	Touch-safe protection acc. to DIN VDE 57 106	safe to back of hand above the printed circuit board
Touch-safe protection acc. to DIN VDE 0470	IP 20	Volume resistance	2.00 mΩ
Can be coded	Yes	Plugging cycles	25
Plugging force/pole, max.	12 N	Pulling force/pole, max.	7 N

Material data

Insulating material	PA GF HT3	Colour	black
Colour chart (similar)	RAL 9011	Insulating material group	II
Comparative Tracking Index (CTI)	≥ 500	Moisture Level (MSL)	3
UL 94 flammability rating	V-0	Contact material	Copper alloy
Contact surface	tinned	Layer structure of solder connection	1...3 µm Ni / 4...6 µm Sn matt
Layer structure of plug contact	1...3 µm Ni / 4...6 µm Sn matt	Storage temperature, min.	-40 °C
Storage temperature, max.	70 °C	Operating temperature, min.	-50 °C
Operating temperature, max.	130 °C	Temperature range, installation, min.	-25 °C
Temperature range, installation, max.	130 °C		

Rated data acc. to IEC

tested acc. to standard	IEC 60664-1, IEC 61984	Rated current, min. number of poles (Tu=20°C)	41 A
Rated current, max. number of poles (Tu=20°C)	41 A	Rated current, min. number of poles (Tu=40°C)	41 A
Rated current, max. number of poles (Tu=40°C)	41 A	Rated voltage for surge voltage class / pollution degree II/2	1,000 V
Rated voltage for surge voltage class / pollution degree III/2	630 V	Rated voltage for surge voltage class / pollution degree III/3	630 V
Rated impulse voltage for surge voltage class/ pollution degree II/2	6 kV	Rated impulse voltage for surge voltage class/ pollution degree III/2	6 kV
Rated impulse voltage for surge voltage class/ contamination degree III/3	6 kV	Short-time withstand current resistance	3 x 1s with 420 A

Rated data acc. to UL 1059

Rated voltage (Use group B / UL 1059)	300 V	Rated voltage (Use group C / UL 1059)	300 V
Rated voltage (Use group D / UL 1059)	600 V	Rated current (Use group B / UL 1059)	33 A
Rated current (Use group C / UL 1059)	33 A	Rated current (Use group D / UL 1059)	5 A
Clearance distance, min.	6.9 mm	Creepage distance, min.	9.6 mm

Weidmüller

SV-SMT 7.62HP/03/90G SC/8 2.6SN BX

Weidmüller Interface GmbH & Co. KG
Klingenbergstraße 26
D-32758 Detmold
Germany

www.weidmueller.com

Technical data

Packing

Packaging	Box	VPE length	0
VPE width	0	VPE height	0

Technical data - hybrid

Pitch in mm (hybrid)	nominal	3.81 mm	
	Hybrid component	Signal	
Pitch in mm (Signal)	3.81 mm		
Pitch in inch (hybrid)	Hybrid component	Signal	
	nominal	0.15 inch	
Pitch in inches (Signal)	0.15 inch		
Pole count (hybrid)	nominal	8	
	Hybrid component	Signal	
Number of poles (Signal)	8		
Number of solder pins per pole (hybrid)	Hybrid component	Signal	
	nominal	1	
Number of solder pins per pole (Signal)	1		
Solder pin dimensions (hybrid)	Hybrid component	Signal	
	Solder pin dimensions	0.8 x 0.8 mm	
Solder pin dimensions (Signal)	0.8 x 0.8 mm		
Solder pin dimensions = d tolerance (hybrid)	Hybrid component	Signal	
	Solder pin dimensions = d tolerance	Lower tolerance with prefix (reveals minimum)	-0,03
		Upper tolerance with prefix (reveals maximum)	+0,01
		Tolerance, unit	mm
Solder pin dimensions = d tolerance (Signal)	-0,03 / +0,01 mm		
Diameter of solder eyelet (hybrid)	Hybrid component	Signal	
	nominal	1.3 mm	
PCB hole diameter (Signal)	1.3 mm		
Tolerance of the diameter of the solder eyelet (hybrid)	Hybrid component	Signal	
	Solder eyelet hole diameter tolerance (D)	± 0.1 mm	
PCB hole diameter tolerance (Signal)	± 0.1 mm		
L2 in mm	11.43 mm		
L2 in inch	0.45 inch		
Number of rows (hybrid)	Hybrid component	Signal	
	Number of rows	2	
Number of rows (Signal)	2		
Contact material (hybrid)	Hybrid component	Signal	
	Contact material	CuMg	
Contact material (Signal)	CuMg		
Contact surface (hybrid)	Hybrid component	Signal	
	Contact surface	tinned	
Contact surface (Signal)	tinned		
Layer structure of the solder connection (hybrid)	Hybrid component	Signal	
	Layer structure of the solder connection	Layer strength	min. 1 µ
			max. 3 µ
		Material	Ni
		Layer strength	min. 4 µ
			max. 8 µ
		Material	Sn

Weidmüller

SV-SMT 7.62HP/03/90G SC/8 2.6SN BX

Weidmüller Interface GmbH & Co. KG
Klingenbergstraße 26
D-32758 Detmold
Germany

www.weidmueller.com

Technical data

Layer structure of the solder connection (Signal)	1-3 µ Ni / 4-8 µ Sn			
Layer structure of the plug contact (hybrid)	Layer structure of the plug contact	Material	Ni	
		Layer strength	min.	1 µ
			max.	3 µ
		Material	Sn	
		Layer strength	min.	4 µ
			max.	8 µ
	Hybrid component	Signal		
Layer structure of the plug contact (Signal)	1-3 µ Ni / 4-8 µ Sn			
Rated impulse voltage for overvoltage class / pollution severity level II/2 (hybrid)	Hybrid component	Signal		
	nominal	320 V		
Rated voltage for overvoltage class/ pollution severity level II/2 (Signal)	320 V			
Rated impulse voltage for overvoltage class / pollution severity level III/2 (hybrid)	Hybrid component	Signal		
	nominal	160 V		
Rated voltage for overvoltage class/ pollution severity level III/2 (Signal)	160 V			
Rated impulse voltage for overvoltage class / pollution severity level III/3 (hybrid)	Hybrid component	Signal		
	nominal	160 V		
Rated voltage for overvoltage class/ pollution severity level III/3 (Signal)	160 V			
Rated impulse voltage for overvoltage class / pollution severity level II/2 (hybrid)	Hybrid component	Signal		
	nominal	2.5 kV		
Rated impulse voltage for overvoltage class/pollution severity level II/2 (Signal)	2.5 kV			
Rated impulse voltage for overvoltage class / pollution severity level III/2 (hybrid)	Hybrid component	Signal		
	nominal	2.5 kV		
Rated impulse voltage for overvoltage class/pollution severity level III/2 (Signal)	2.5 kV			
Rated impulse voltage for overvoltage class / pollution severity level III/3 (hybrid)	Hybrid component	Signal		
	nominal	2.5 kV		
Rated impulse voltage for overvoltage class/pollution severity level III/3 (Signal)	2.5 kV			
Short-time withstand current capacity (hybrid)	Short-time withstand current resistance	3 x 1s with 80 A		
	Hybrid component	Signal		
Short-time withstand current resistance (Signal)	3 x 1s with 80 A			
Creepage distance (hybrid)	Hybrid component	Signal		
	min.	4.38 mm		
Clearance distance (hybrid)	Hybrid component	Signal		
	min.	3.6 mm		
Rated voltage (Use group B / CSA) (Hybrid)	Hybrid component	Signal		
	nominal	300 V		
Rated voltage (Use group B / CSA) (Signal)	300 V			
Rated voltage (Use group C / CSA) (Hybrid)	Hybrid component	Signal		
	nominal	50 V		
Rated voltage (Use group C / CSA) (Signal)	50 V			
Rated current (Use group B / CSA) (Hybrid)	Hybrid component	Signal		
	nominal	9 A		

SV-SMT 7.62HP/03/90G SC/8 2.6SN BX

Weidmüller Interface GmbH & Co. KG
Klingenbergstraße 26
D-32758 Detmold
Germany

www.weidmueller.com

Technical data

Rated current (Use group B / CSA) (Signal)	9 A	
Rated current (Use group C / CSA) (Hybrid)	Hybrid component	Signal
	nominal	9 A
Rated current (Use group C / CSA) (Signal)	9 A	
Rated current (Use group D / CSA) (Hybrid)	Hybrid component	Signal
	nominal	9 A
Rated current (Use group D / CSA) (Signal)	9 A	
Rated voltage (Use group B / UL 1059) (Hybrid)	Hybrid component	Signal
	nominal	300 V
Rated voltage (Use group B / UL 1059] (Signal)	300 V	
Rated voltage (Use group C / UL 1059) (Hybrid)	Hybrid component	Signal
	nominal	50 V factory wiring
Rated voltage (Use group C / UL 1059] (Signal)	50 V factory wiring	
Rated voltage (Use group D / UL 1059) (Hybrid)	Hybrid component	Signal
	nominal	300 V
Rated voltage (Use group D / UL 1059] (Signal)	300 V	
Rated current (Use group B / UL 1059) (Hybrid)	Hybrid component	Signal
	nominal	5 A
Rated current (Use group B / UL 1059) (Signal)	5 A	
Rated current (Use group C / UL 1059) (Hybrid)	Hybrid component	Signal
	nominal	5 A
Rated current (Use group C / UL 1059) (Signal)	5 A	
Rated current (Use group D / UL 1059) (Hybrid)	Hybrid component	Signal

Classifications

ETIM 6.0	EC002637	ETIM 7.0	EC002637
ECLASS 9.0	27-44-04-02	ECLASS 9.1	27-44-04-02
ECLASS 10.0	27-44-04-02	ECLASS 11.0	27-46-02-01

Important note

IPC conformity	Conformity: The products are developed, manufactured and delivered according international recognized standards and norms and comply with the assured properties in the data sheet resp. fulfill decorative properties in accordance with IPC-A-610 "Class 2". Further claims on the products can be evaluated on request.
Notes	• Technical specifications refer to the power contacts • Technical data of signal contacts: 50V / 5A, stripping length 8mm • Rated current related to rated cross-section & min. No. of poles. • Specifications of diagram: P1=7.62 mm; P2=3.81 mm • Rated data refer only to the component itself. Clearance and creepage distances to other components are to be designed in accordance with the relevant application standards. • Long term storage of the product with average temperature of 50 °C and average humidity 70%, 36 months

SV-SMT 7.62HP/03/90G SC/8 2.6SN BX

Weidmüller Interface GmbH & Co. KG
Klingenbergstraße 26
D-32758 Detmold
Germany

www.weidmueller.com

Technical data

Downloads

Engineering Data	STEP

SV-SMT 7.62HP/03/90G SC/8 2.6SN BX

Weidmüller Interface GmbH & Co. KG
Klingenbergstraße 26
D-32758 Detmold
Germany

www.weidmueller.com

Drawings

Dimensional drawing

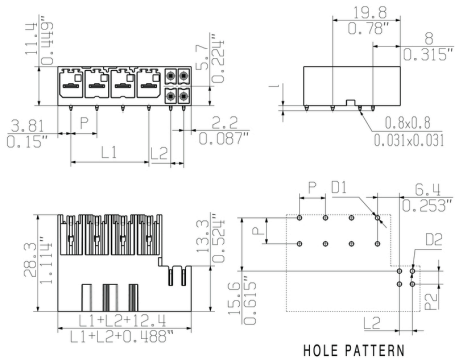

Dimensions without tolerances are no check dimensions

The English version is binding

SV-SMT 7.62IT/04/90/270

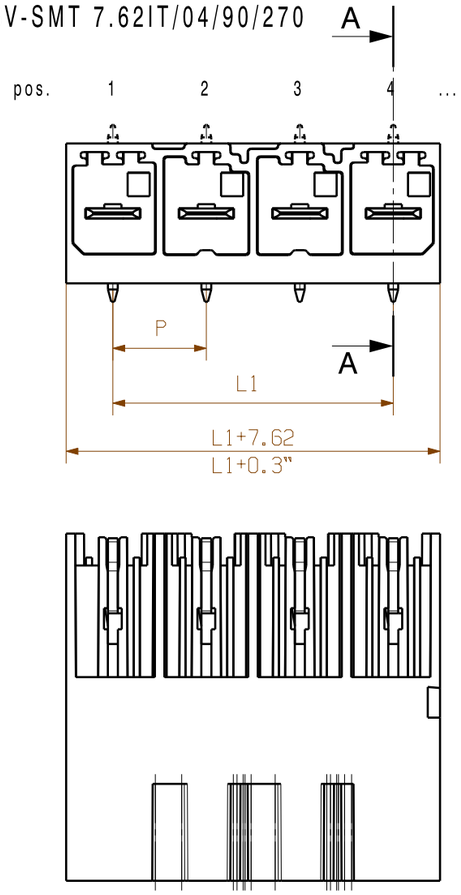

A - A

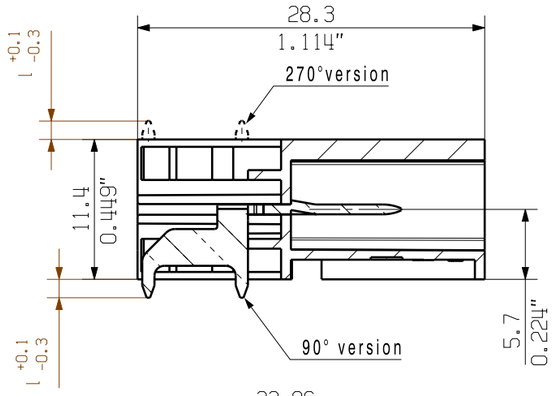

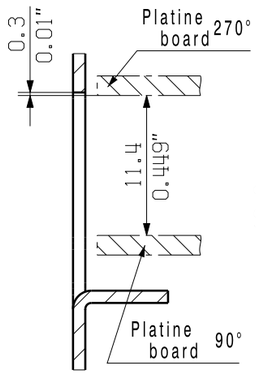

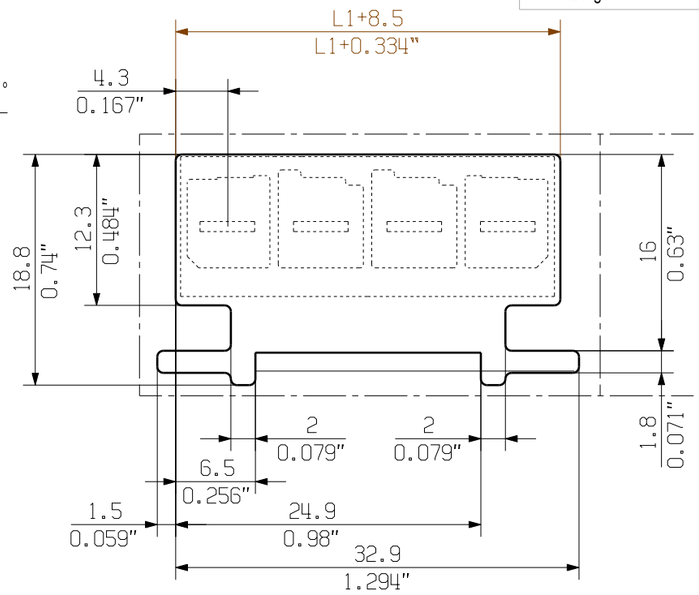

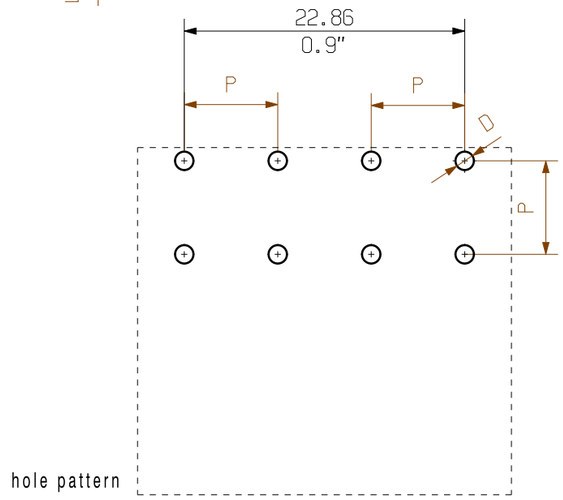

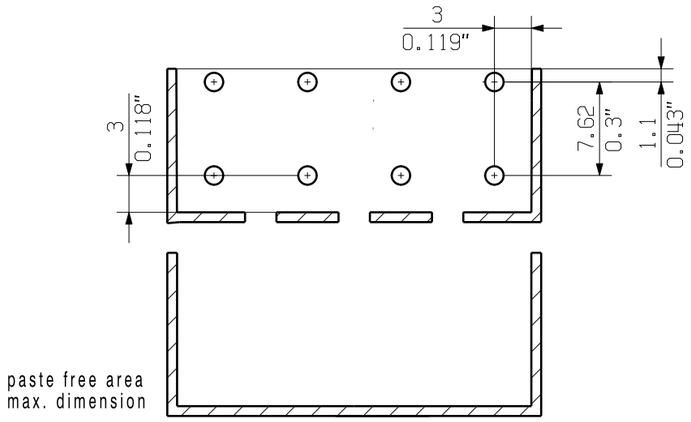

SV-SMT 7.62IT/04/90G
1:1

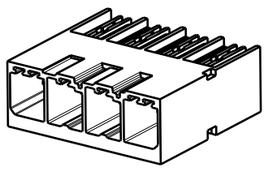

D = Ø1.5+0.1/-0.05
d = 0.8x1.0

P = Raster /pitch

9	60,96	68,58
8	53,34	60,96
7	45,72	53,34
6	38,1	45,72
5	30,48	38,1
4	22,86	30,48
3	15,24	22,86
2	7,62	15,24
n	L1	L2

1.5
2.6
3.5
l [mm]

GENERAL TOLERANCE:
DIN ISO 2768-m

For the mounting of PCBs, it should be noted that the rated data relates only to the PCB components alone.
The neccessary creepage and clearance paths must be observed in connection with the respective applicant in accordance to IEC 664 / VDE 0110.
The current-carrying capacity and pitch tolerance is to be determined according to DIN IEC 326 part 3 very fine.

Weidmüller PCB components are tested to the DIN EN 61984 standard, and are valid for its field of application.
Provided that the components are used to the intended purpose, all requirements with respect to the occuring of electrical, mechanical, thermic and corrosive stress will be satisfied.

RoHS COMPLIANT
EC00001677
First Issue Date
14.11.2017

Max. nos.
Modification

Prim PLM Part No.: 114319
Prim ERP Part No.: 2454160000

Weidmüller

66403
Drawing no.
4
Issue no.
Sheet 06 of 16 sheets

	Date	Name
Drawn	14.05.2019	Helis, Maria
Responsible		Krug, Matthias
Approved	19.06.2019	Lang, Thomas

Scale: 2:1 Size: A3

Drawings Assembly

SV-SMT 7.62IT/../MF...RL
STIFTLEISTE
MALE HEADER

Product file: 7407 BLF 7.50HP

The reproduction, distribution and utilization of this document as well as the communication of its contents to others without explicit authorization is prohibited.
Offenders will be held liable for the payment of damages. Weidmueller exclusively reserves the right to file for patents, utility models or designs.
© Weidmueller Interface GmbH & Co. KG

Recommended wave solderding profiles

Weidmüller Interface GmbH & Co. KG
Klingenbergstraße 16
D-32758 Detmold
Germany
Fon: +49 5231 14-0
Fax: +49 5231 14-292083
www.weidmueller.com

Single Wave:

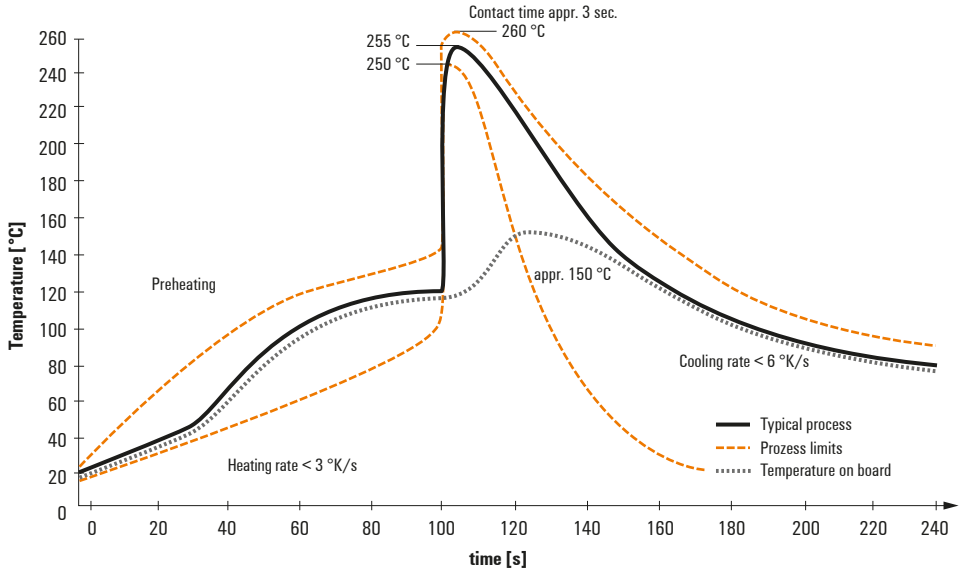

Double Wave:

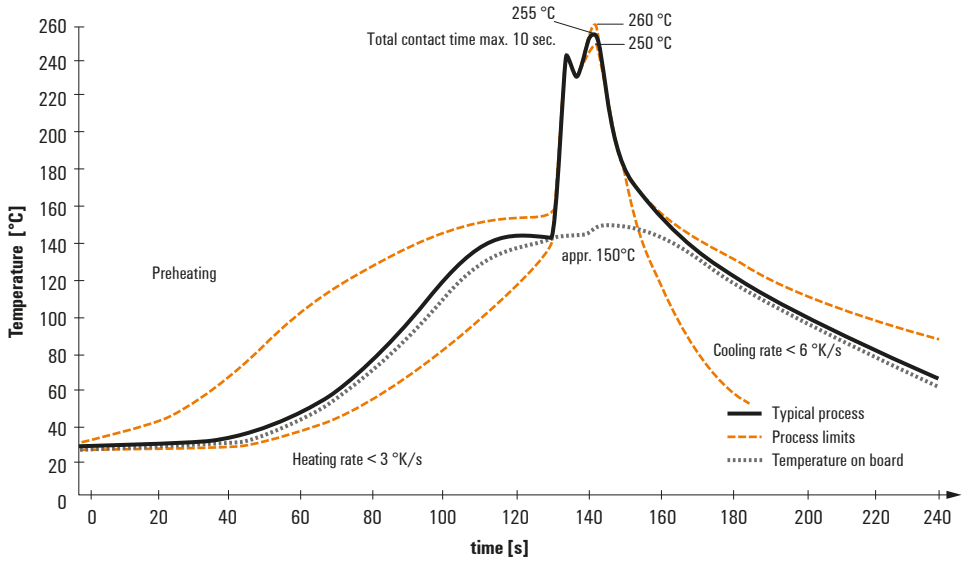

Wave soldering profiles

Wired connection elements should be processed in accordance with the DIN EN 61760-1 standard. We have included two recommendations for practical wave soldering profiles, with which Weidmüller PCB terminals and connectors are qualified.

When choosing a suitable profile for your application, the following factors also need to be considered:
- PCB thickness
- Proportion of Cu in the layers
- Single/double-sided assembly
- Product range
- Heating and cooling rates

The single and double wave profiles each indicate the recommended operating range, including the maximum soldering temperature of 260°C. In practice, the maximum soldering temperature is quite often well below the above maximum profile.

We reserve the right to make technical changes.

Recommended reflow soldering profile

Weidmüller Interface GmbH & Co. KG
Klingenbergstraße 16
D-32758 Detmold
Germany
Fon: +49 5231 14-0
Fax: +49 5231 14-292083
www.weidmueller.com

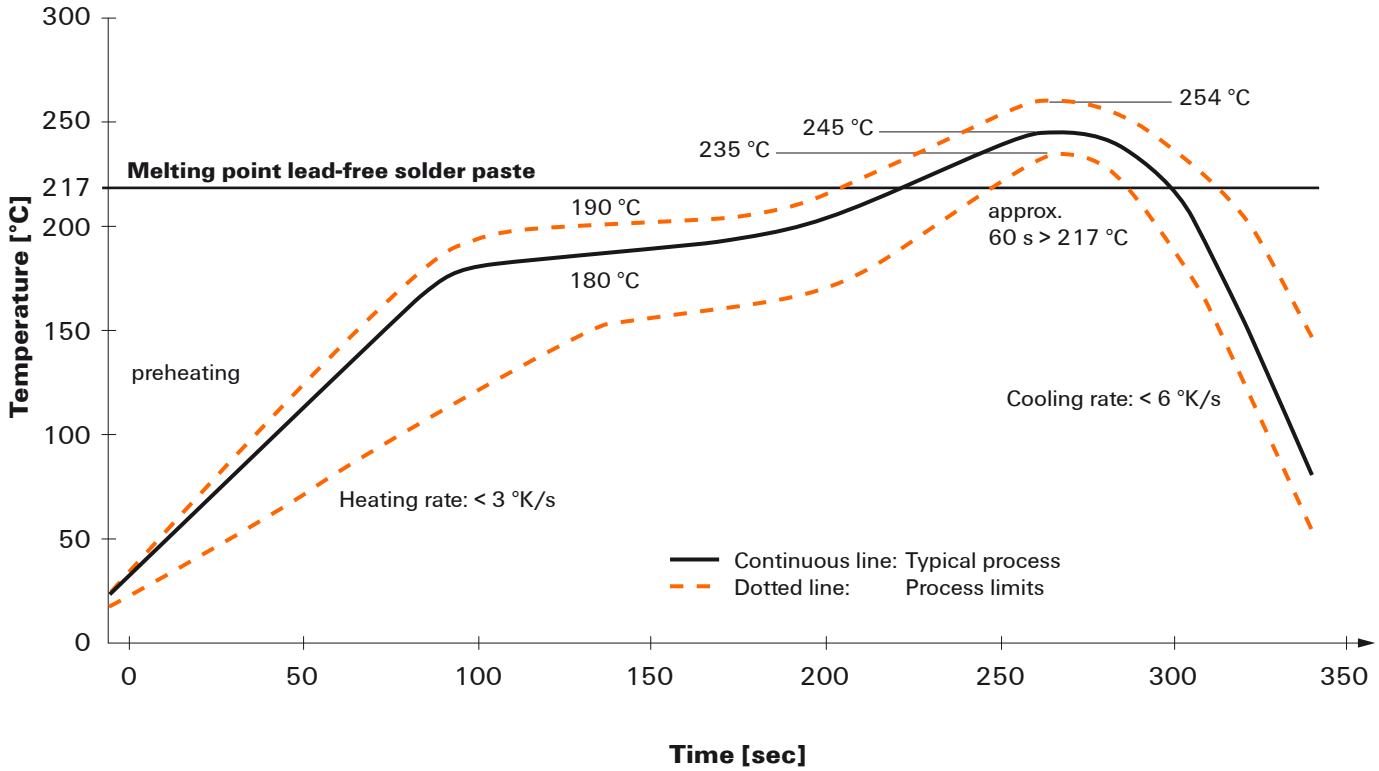

Reflow soldering profile

The perfect soldering profile for SMT Surface Mount Technology is one the most exiting question in SMT production. But there are more than one correct answer: The diagram of temperature-on-time is related to processing features of solder paste and to maximum load of components.

We have to consider the following parameters:
- Time for pre heating
- Maximum temperature
- Time above melting point
- Time for cooling
- Maximum heating rate
- Maximum cooling rate

We recommend a typical solder profile with associated process limits. With preheating components and board are prepared smoothly for the solder phase. Heating rate is typically ≤ +3K/s. In parallel the solder paste is ‚activated'. The time above melting point of 217°C the paste gets liquid and components and boards begin to connect. The maximum temperature of 245°C to 254°C should stay between 10 and 40 seconds. In the cooling phase at ≥ -6K/s solder is cured. Board and components cool down while avoiding cold cracks.

We reserve the right to make technical changes.