# Flow diagrams FRM-NOC (AC10)

**Technical specifications**

**Flow diagrams (Natural Gas)**

**CAD view**

## ESPECIFICACIONES TÉCNICAS / TECHNICAL SPECIFICATION

DUNGS®
Combustion Controls

Regulador de presión con válvula de seguridad, conforme a las normas EN-334 y EN-14382 /
Pressure regulator with safety shut-off valve, in accordance with the standards EN-334 and EN-14382

| | |
|---|---|
| Presión de operación / Operating pressure | Max. 10 Bar / 1000 kPa / 145 Psig |
| Rango de presión de salida FRM / Outlet pressure range FRM | Ver tabla de Selección / See Set point Table |
| Temperatura máxima ambiental / Ambient maximum temperature | 60 ºC / 145ºF |
| Temperatura minima ambiental / Ambient minimum temperature | -20 ºC / -10 ºF |
| Fluido / Flow | Gas Natural, GLP / Natural Gas, LPG |
| Posición de montaje / Mounting Position | *Puede variar el tarado para presiones inferiores a 300 mbar / for pressures below 300 mbar setpoint can be altered |
| Tipo de Construcción / Construction Type: | DS (De resistencia diferencial) / DS (Diferential strenght) |
| Materiales / Materials — Cuerpo / Body | Hierro fundido / Cast iron EN GJS 500-7 or EN GJS 400-15 |
| Actuador / Actuator | Aluminio / Aluminium |
| Membranas / Membranes | NBR EN549 conform |
| Diametro Nominal / Nominal Diameter | Rosca 1" BSP o NPT / Thread 1" BSP or NPT |

| | BSP / SAV | BSP | NPT / SAV | NPT |
|---|---|---|---|---|
| Codigo de producto / Product's code | 279042 | 279054 | 280224 | 280236 |

Producto diseñado acorde a las normas EN-334 y EN-14382 / Product designed in accordance to EN-334 and EN-14382
Categoría III (Regulador) y IV (Válvula de seguridad) acorde a PED 2014/68/UE & CRN B51.14 pendiente
Product category III (Regulator) and IV (Safety valve) according to PED 2014/68/UE & CRN B51.14 pending

| Muelle de regulación / Regulation spring | | | | | | | | | | | |
|---|---|---|---|---|---|---|---|---|---|---|---|
| Ø hilo / wire | Rango / Range (min-Max) | | | | | | | | | Color/Color | codigo/code |
| 2,5 | 20 | 35 | (mbar) | 2 | 3,5 | (kPa) | 10 | 10 | ("WC) | rojo/red | 286372 |
| 2,8 | 30 | 55 | (mbar) | 3 | 5,5 | (kPa) | 10 | 20 | ("WC) | blanco/white | 286373 |
| 3 | 50 | 75 | (mbar) | 5 | 7,5 | (kPa) | 20 | 30 | ("WC) | amarillo/yellow | 286374 |
| 3,2 | 60 | 100 | (mbar) | 6 | 10 | (kPa) | 20 | 40 | ("WC) | azul/blue | 287676 |

| Muelle de mínima presión / Under pressure spring (UPSO) | | | | | | | | | | | |
|---|---|---|---|---|---|---|---|---|---|---|---|
| Ø hilo / wire | Rango / Range (min-Max) | | | | | | | | | Color/Color | codigo/code |
| 1,25 | 10 | 32 | (mbar) | 1 | 3,2 | (kPa) | 0 | 10 | ("WC) | Blanco/white | 270171 |
| 1,5 | 24 | 40 | (mbar) | 2,4 | 4 | (kPa) | 10 | 20 | ("WC) | Amarillo/yellow | 270175 |
| 2 | 30 | 115 | (mbar) | 3 | 11,5 | (kPa) | 10 | 50 | ("WC) | azul/blue | 270176 |

| Muelle de máxima presión / Over pressure spring (OPSO) | | | | | | | | | | | |
|---|---|---|---|---|---|---|---|---|---|---|---|
| Ø hilo / wire | Rango / Range (min-Max) | | | | | | | | | Color/Color | codigo/code |
| 2,25 | 40 | 130 | (mbar) | 4 | 13 | (kPa) | 20 | 1,9 | ("WC) | plata/silver | 270181 |
| 2,5 | 60 | 190 | (mbar) | 6 | 19 | (kPa) | 20 | 2,8 | ("WC) | verde/green | 270182 |
| 2,75 | 90 | 240 | (mbar) | 9 | 24 | (kPa) | 40 | 3,5 | ("WC) | rojo/red | 270183 |

| Orificios / Orifices | | | | | | |
|---|---|---|---|---|---|---|
| Medida/size | Ø6 | Ø8 | Ø10 | Ø12 | | |
| $P_{umax}$* (bar/psig) | 10 / 145 | 10 / 145 | 10 / 145 | 10 / 145 | | |

*Máxima presión de entrada / Maximum inlet pressure

DUNGS®
Combustion Controls

**Tablas de caudal / Flow tables (SI units)**

| Ø6 | Pressures (Bar) vs Flow ($Nm^3/h$) | | | | | | | |
|---|---|---|---|---|---|---|---|---|
| **Pin / Pout** | **0,02** | **0,03** | **0,04** | **0,05** | **0,06** | **0,07** | **0,08** | **0,1** |
| **0,2** | 16 | 15 | 15 | 15 | 14 | 14 | 13 | 12 |
| **0,3** | 20 | 19 | 19 | 19 | 19 | 18 | 18 | 17 |
| **0,4** | 23 | 23 | 23 | 22 | 22 | 22 | 22 | 21 |
| **0,5** | 26 | 26 | 25 | 25 | 25 | 25 | 25 | 24 |
| **0,75** | 31 | 31 | 31 | 31 | 31 | 31 | 31 | 31 |
| **1** | 36 | 36 | 36 | 36 | 36 | 36 | 36 | 36 |
| **1,5** | 45 | 45 | 45 | 45 | 45 | 45 | 45 | 45 |
| **2** | 53 | 53 | 53 | 53 | 53 | 53 | 53 | 53 |
| **3** | 68 | 68 | 68 | 68 | 68 | 68 | 68 | 68 |
| **4** | 83 | 83 | 83 | 83 | 83 | 83 | 83 | 83 |
| **5** | 96 | 96 | 96 | 96 | 96 | 96 | 96 | 96 |
| **6** | 131 | 131 | 131 | 131 | 131 | 131 | 131 | 131 |
| **7** | 149 | 149 | 149 | 149 | 149 | 149 | 149 | 149 |
| **8** | 168 | 168 | 168 | 168 | 168 | 168 | 168 | 168 |
| **9** | 187 | 187 | 187 | 187 | 187 | 187 | 187 | 187 |
| **10** | 205 | 205 | 205 | 205 | 205 | 205 | 205 | 205 |

*Datos en azul corresponden a toma externa / Values in blue correspond to external impulse

d=0,83 $Kg/m^3$ AC 10

| Ø8 | Pressures (Bar) vs Flow ($Nm^3/h$) | | | | | | | |
|---|---|---|---|---|---|---|---|---|
| **Pin / Pout** | **0,02** | **0,03** | **0,04** | **0,05** | **0,06** | **0,07** | **0,08** | **0,1** |
| **0,2** | 26 | 25 | 25 | 24 | 23 | 23 | 22 | 20 |
| **0,3** | 32 | 32 | 31 | 31 | 30 | 30 | 29 | 28 |
| **0,4** | 37 | 37 | 37 | 36 | 36 | 36 | 35 | 34 |
| **0,5** | 42 | 41 | 41 | 41 | 41 | 40 | 40 | 39 |
| **0,75** | 50 | 50 | 50 | 50 | 50 | 50 | 50 | 49 |
| **1** | 57 | 57 | 57 | 57 | 57 | 57 | 57 | 57 |
| **1,5** | 69 | 69 | 69 | 69 | 69 | 69 | 69 | 69 |
| **2** | 80 | 80 | 80 | 80 | 80 | 80 | 80 | 80 |
| **3** | 119 | 119 | 119 | 119 | 119 | 119 | 119 | 119 |
| **4** | 148 | 148 | 148 | 148 | 148 | 148 | 148 | 148 |
| **5** | 178 | 178 | 178 | 178 | 178 | 178 | 178 | 178 |
| **6** | 208 | 208 | 208 | 208 | 208 | 208 | 208 | 208 |
| **7** | 237 | 237 | 237 | 237 | 237 | 237 | 237 | 237 |
| **8** | 267 | 267 | 267 | 267 | 267 | 267 | 267 | 267 |
| **9** | 296 | 296 | 296 | 296 | 296 | 296 | 296 | 296 |
| **10** | 0 | 326 | 326 | 326 | 326 | 326 | 326 | 326 |

*Datos en azul corresponden a toma externa / Values in blue correspond to external impulse

d=0,83 $Kg/m^3$ AC 10

DUNGS® Combustion Controls

**Tablas de caudal / Flow tables (SI units)**

| Ø10 | Pressures (Bar) vs Flow ($Nm^3/h$) | | | | | | | |
|---|---|---|---|---|---|---|---|---|
| **Pin / Pout** | **0,02** | **0,03** | **0,04** | **0,05** | **0,06** | **0,07** | **0,08** | **0,1** |
| **0,2** | 35 | 34 | 33 | 32 | 31 | 30 | 29 | 27 |
| **0,3** | 43 | 42 | 42 | 41 | 41 | 40 | 39 | 38 |
| **0,4** | 50 | 49 | 49 | 48 | 48 | 47 | 47 | 46 |
| **0,5** | 55 | 55 | 55 | 54 | 54 | 54 | 53 | 52 |
| **0,75** | 67 | 67 | 66 | 66 | 66 | 66 | 66 | 65 |
| **1** | 75 | 75 | 75 | 75 | 75 | 75 | 75 | 75 |
| **1,5** | 90 | 90 | 90 | 90 | 90 | 90 | 90 | 90 |
| **2** | 102 | 102 | 102 | 102 | 102 | 102 | 102 | 102 |
| **3** | 163 | 163 | 163 | 163 | 163 | 163 | 163 | 163 |
| **4** | 203 | 203 | 203 | 203 | 203 | 203 | 203 | 203 |
| **5** | 244 | 244 | 244 | 244 | 244 | 244 | 244 | 244 |
| **6** | 0 | 284 | 284 | 284 | 284 | 284 | 284 | 284 |
| **7** | 0 | 0 | 325 | 325 | 325 | 325 | 325 | 325 |
| **8** | 0 | 0 | 0 | 365 | 365 | 365 | 365 | 365 |
| **9** | 0 | 0 | 0 | 0 | 406 | 406 | 406 | 406 |
| **10** | 0 | 0 | 0 | 0 | 0 | 447 | 447 | 447 |

*Datos en azul corresponden a toma externa / Values in blue correspond to external impulse

d=0,83 $Kg/m^3$ AC 10

| Ø12 | Pressures (Bar) vs Flow ($Nm^3/h$) | | | | | | | |
|---|---|---|---|---|---|---|---|---|
| **Pin / Pout** | **0,02** | **0,03** | **0,04** | **0,05** | **0,06** | **0,07** | **0,08** | **0,1** |
| **0,2** | 38 | 37 | 36 | 35 | 34 | 33 | 32 | 29 |
| **0,3** | 47 | 46 | 46 | 45 | 44 | 44 | 43 | 41 |
| **0,4** | 54 | 54 | 53 | 53 | 52 | 52 | 51 | 50 |
| **0,5** | 61 | 60 | 60 | 59 | 59 | 59 | 58 | 57 |
| **0,75** | 89 | 89 | 89 | 89 | 89 | 88 | 88 | 88 |
| **1** | 104 | 104 | 104 | 104 | 103 | 103 | 103 | 103 |
| **1,5** | 129 | 129 | 129 | 129 | 129 | 129 | 129 | 129 |
| **2** | 155 | 155 | 155 | 155 | 155 | 155 | 155 | 155 |
| **3** | 207 | 207 | 207 | 207 | 207 | 207 | 207 | 207 |
| **4** | 258 | 258 | 258 | 258 | 258 | 258 | 258 | 258 |
| **5** | 0 | 310 | 310 | 310 | 310 | 310 | 310 | 310 |
| **6** | 0 | 0 | 361 | 361 | 361 | 361 | 361 | 361 |
| **7** | 0 | 0 | 0 | 413 | 413 | 413 | 413 | 413 |
| **8** | 0 | 0 | 0 | 0 | 464 | 464 | 464 | 464 |
| **9** | 0 | 0 | 0 | 0 | 0 | 516 | 516 | 516 |
| **10** | 0 | 0 | 0 | 0 | 0 | 0 | 567 | 567 |

*Datos en azul corresponden a toma externa / Values in blue correspond to external impulse

d=0,83 $Kg/m^3$ AC 10

DUNGS®
Combustion Controls

**Tablas de caudal / Flow tables (Imperial units)**

| Ø6 | Pressures (Psig/"WC) vs Flow (SCFH) | | | | | | | |
|---|---|---|---|---|---|---|---|---|
| **Pin / Pout** | **8 "WC** | **12 "WC** | **16 "WC** | **20 "WC** | **24 "WC** | **28 "WC** | **32 "WC** | **40 "WC** |
| **3 Psig** | 560 | 547 | 533 | 519 | 504 | 488 | 471 | 434 |
| **4 Psig** | 697 | 688 | 678 | 668 | 658 | 647 | 635 | 611 |
| **6 Psig** | 810 | 803 | 796 | 788 | 781 | 773 | 764 | 747 |
| **7 Psig** | 908 | 902 | 897 | 891 | 886 | 880 | 873 | 860 |
| **11 Psig** | 1112 | 1109 | 1107 | 1104 | 1101 | 1098 | 1095 | 1089 |
| **15 Psig** | 1279 | 1279 | 1278 | 1277 | 1277 | 1276 | 1275 | 1272 |
| **22 Psig** | 1575 | 1575 | 1575 | 1575 | 1575 | 1575 | 1575 | 1575 |
| **29 Psig** | 1862 | 1862 | 1862 | 1862 | 1862 | 1862 | 1862 | 1862 |
| **44 Psig** | 2409 | 2409 | 2409 | 2409 | 2409 | 2409 | 2409 | 2409 |
| **58 Psig** | 2921 | 2921 | 2921 | 2921 | 2921 | 2921 | 2921 | 2921 |
| **73 Psig** | 3397 | 3397 | 3397 | 3397 | 3397 | 3397 | 3397 | 3397 |
| **87 Psig** | 4617 | 4617 | 4617 | 4617 | 4617 | 4617 | 4617 | 4617 |
| **102 Psig** | 5275 | 5275 | 5275 | 5275 | 5275 | 5275 | 5275 | 5275 |
| **116 Psig** | 5934 | 5934 | 5934 | 5934 | 5934 | 5934 | 5934 | 5934 |
| **131 Psig** | 6592 | 6592 | 6592 | 6592 | 6592 | 6592 | 6592 | 6592 |
| **145 Psig** | 7250 | 7250 | 7250 | 7250 | 7250 | 7250 | 7250 | 7250 |

*Datos en azul corresponden a toma externa / Values in blue correspond to external impulse

d=0,05 lb/ft$^3$ AC 10

| Ø8 | Pressures (Psig/"WC) vs Flow (SCFH) | | | | | | | |
|---|---|---|---|---|---|---|---|---|
| **Pin / Pout** | **8 "WC** | **12 "WC** | **16 "WC** | **20 "WC** | **24 "WC** | **28 "WC** | **32 "WC** | **40 "WC** |
| **3 Psig** | 917 | 895 | 873 | 849 | 824 | 798 | 770 | 709 |
| **4 Psig** | 1136 | 1121 | 1105 | 1089 | 1072 | 1054 | 1035 | 996 |
| **6 Psig** | 1314 | 1303 | 1291 | 1279 | 1267 | 1254 | 1240 | 1212 |
| **7 Psig** | 1467 | 1459 | 1450 | 1441 | 1431 | 1422 | 1412 | 1390 |
| **11 Psig** | 1778 | 1775 | 1771 | 1767 | 1762 | 1758 | 1753 | 1742 |
| **15 Psig** | 2025 | 2024 | 2024 | 2023 | 2021 | 2020 | 2018 | 2014 |
| **22 Psig** | 2440 | 2440 | 2440 | 2440 | 2440 | 2440 | 2440 | 2440 |
| **29 Psig** | 2819 | 2819 | 2819 | 2819 | 2819 | 2819 | 2819 | 2819 |
| **44 Psig** | 4194 | 4194 | 4194 | 4194 | 4194 | 4194 | 4194 | 4194 |
| **58 Psig** | 5239 | 5239 | 5239 | 5239 | 5239 | 5239 | 5239 | 5239 |
| **73 Psig** | 6284 | 6284 | 6284 | 6284 | 6284 | 6284 | 6284 | 6284 |
| **87 Psig** | 7329 | 7329 | 7329 | 7329 | 7329 | 7329 | 7329 | 7329 |
| **102 Psig** | 8374 | 8374 | 8374 | 8374 | 8374 | 8374 | 8374 | 8374 |
| **116 Psig** | 9419 | 9419 | 9419 | 9419 | 9419 | 9419 | 9419 | 9419 |
| **131 Psig** | 10464 | 10464 | 10464 | 10464 | 10464 | 10464 | 10464 | 10464 |
| **145 Psig** | 0 | 11509 | 11509 | 11509 | 11509 | 11509 | 11509 | 11509 |

*Datos en azul corresponden a toma externa / Values in blue correspond to external impulse

d=0,05 lb/ft$^3$ AC 10

DUNGS®
Combustion Controls

**Tablas de caudal / Flow tables (Imperial units)**

| Ø10 | Pressures (Psig/"WC) vs Flow (SCFH) | | | | | | | |
|---|---|---|---|---|---|---|---|---|
| **Pin / Pout** | **8 "WC** | **12 "WC** | **16 "WC** | **20 "WC** | **24 "WC** | **28 "WC** | **32 "WC** | **40 "WC** |
| **3 Psig** | 1227 | 1198 | 1168 | 1136 | 1103 | 1068 | 1031 | 949 |
| **4 Psig** | 1517 | 1497 | 1476 | 1454 | 1432 | 1408 | 1383 | 1331 |
| **6 Psig** | 1752 | 1737 | 1722 | 1706 | 1689 | 1672 | 1654 | 1616 |
| **7 Psig** | 1952 | 1941 | 1929 | 1917 | 1905 | 1892 | 1878 | 1849 |
| **11 Psig** | 2353 | 2349 | 2343 | 2338 | 2332 | 2326 | 2319 | 2305 |
| **15 Psig** | 2665 | 2664 | 2663 | 2661 | 2660 | 2658 | 2656 | 2651 |
| **22 Psig** | 3172 | 3172 | 3172 | 3172 | 3172 | 3172 | 3172 | 3172 |
| **29 Psig** | 3617 | 3617 | 3617 | 3617 | 3617 | 3617 | 3617 | 3617 |
| **44 Psig** | 5746 | 5746 | 5746 | 5746 | 5746 | 5746 | 5746 | 5746 |
| **58 Psig** | 7178 | 7178 | 7178 | 7178 | 7178 | 7178 | 7178 | 7178 |
| **73 Psig** | 8609 | 8609 | 8609 | 8609 | 8609 | 8609 | 8609 | 8609 |
| **87 Psig** | 0 | 10041 | 10041 | 10041 | 10041 | 10041 | 10041 | 10041 |
| **102 Psig** | 0 | 0 | 11473 | 11473 | 11473 | 11473 | 11473 | 11473 |
| **116 Psig** | 0 | 0 | 0 | 12905 | 12905 | 12905 | 12905 | 12905 |
| **131 Psig** | 0 | 0 | 0 | 0 | 14336 | 14336 | 14336 | 14336 |
| **145 Psig** | 0 | 0 | 0 | 0 | 0 | 15768 | 15768 | 15768 |

*Datos en azul corresponden a toma externa / Values in blue correspond to external impulse

d=0,05 lb/ft$^3$ AC 10

| Ø12 | Pressures (Psig/"WC) vs Flow (SCFH) | | | | | | | |
|---|---|---|---|---|---|---|---|---|
| **Pin / Pout** | **8 "WC** | **12 "WC** | **16 "WC** | **20 "WC** | **24 "WC** | **28 "WC** | **32 "WC** | **40 "WC** |
| **3 Psig** | 1346 | 1314 | 1281 | 1246 | 1210 | 1171 | 1130 | 1041 |
| **4 Psig** | 1664 | 1641 | 1618 | 1595 | 1570 | 1544 | 1517 | 1459 |
| **6 Psig** | 1920 | 1904 | 1887 | 1870 | 1851 | 1832 | 1813 | 1771 |
| **7 Psig** | 2138 | 2126 | 2113 | 2100 | 2087 | 2072 | 2058 | 2026 |
| **11 Psig** | 3158 | 3152 | 3145 | 3137 | 3129 | 3121 | 3112 | 3094 |
| **15 Psig** | 3659 | 3658 | 3657 | 3655 | 3653 | 3650 | 3647 | 3640 |
| **22 Psig** | 4570 | 4570 | 4570 | 4570 | 4570 | 4570 | 4570 | 4570 |
| **29 Psig** | 5479 | 5479 | 5479 | 5479 | 5479 | 5479 | 5479 | 5479 |
| **44 Psig** | 7298 | 7298 | 7298 | 7298 | 7298 | 7298 | 7298 | 7298 |
| **58 Psig** | 9116 | 9116 | 9116 | 9116 | 9116 | 9116 | 9116 | 9116 |
| **73 Psig** | 0 | 10935 | 10935 | 10935 | 10935 | 10935 | 10935 | 10935 |
| **87 Psig** | 0 | 0 | 12753 | 12753 | 12753 | 12753 | 12753 | 12753 |
| **102 Psig** | 0 | 0 | 0 | 14572 | 14572 | 14572 | 14572 | 14572 |
| **116 Psig** | 0 | 0 | 0 | 0 | 16390 | 16390 | 16390 | 16390 |
| **131 Psig** | 0 | 0 | 0 | 0 | 0 | 18209 | 18209 | 18209 |
| **145 Psig** | 0 | 0 | 0 | 0 | 0 | 0 | 20027 | 20027 |

*Datos en azul corresponden a toma externa / Values in blue correspond to external impulse

d=0,05 lb/ft$^3$ AC 10

Plano CAD, no cambiar manualmente!
CAD-Drawing, do not change manually!

This design and/or document is proprietary and protected by copyright.
It may not, without our prior express consent, be copied nor transmitted
to any third party. It must be returned to us upon discharge of the order.

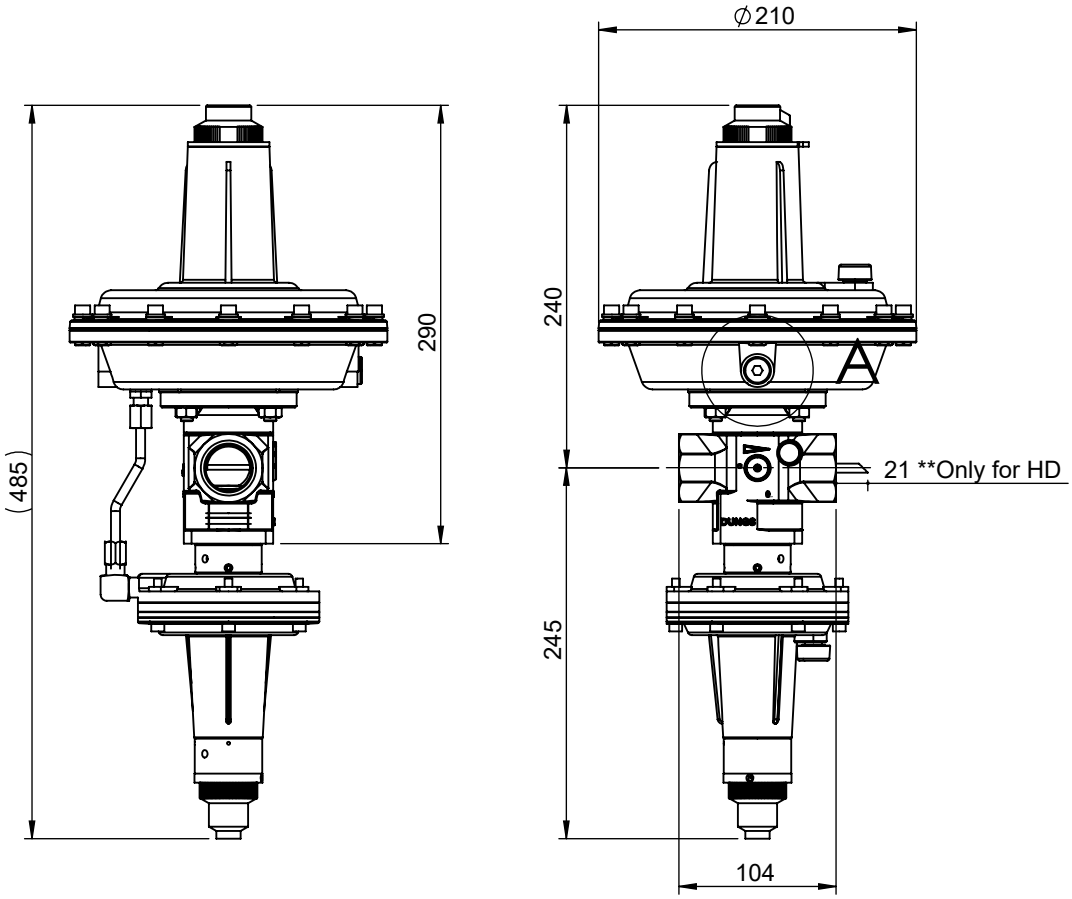


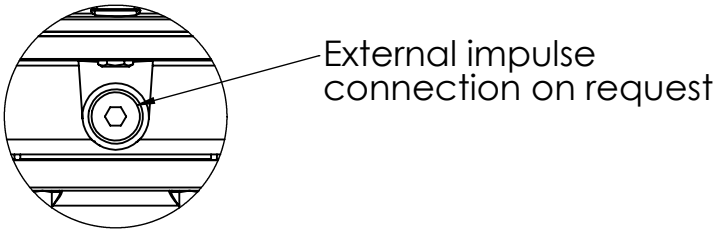


DETALLE A
ESCALA 2 : 5

3D

| Rev | Descripción Modificación | Fecha | Nom |
|---|---|---|---|
| | | | |

**Karl Dungs S.L.U.**
Combustion Controls
Avinguda de Can Roqueta, 15 - Pol. Can Roqueta
E-08202 - Sabadell
Barcelona - ESPAÑA

| | Fecha | Nombre | Firmado |
|---|---|---|---|
| Dibujado | 31/10/2018 | J.Inglés | |
| Verificado | 31/10/2018 | A.Rof | |
| Aprobado | 31/10/2018 | GX | |

Tolerancias según ISO 2768
TOLERANCIAS GENERALES ISO 2768-mK
(MEDIUM) TOLERANCIAS LINEALES
Roscas a 6g/6H y longitudes +1.0/-0

Rz 12.5 ( )

Eliminar rebabas y cantos vivos

Escala: 1:5

Material:

Acabado:

Tratamiento:

Peso: 6789.51 gr.

Descripción:
DIMENSIONS FRM-NOC10010ND/MD/HD

| Código Pieza | Rev. | Formato | Pág. |
|---|---|---|---|
| FRM-NOC10010ND_MD_HD | 0 | A4 | 1 de 1 |

Ubicación Fichero: O:\Eng Dep\Products\Assemblies\Pressure Regulators\Industrial\FRM NC\8010\3D\

Index:

Dimensiones en mm

Queda prohibida la preproducción total o parcial de este documento
y del contenido del mismo sin la autorización escrita de Karl Dungs S.L.U.
Todos los derechos reservados.

## ESPECIFICACIONES TÉCNICAS / TECHNICAL SPECIFICATION

DUNGS®
Combustion Controls

Regulador de presión con válvula de seguridad, conforme a las normas EN-334 y EN-14382 /
Pressure regulator with safety shut-off valve, in accordance with the standards EN-334 and EN-14382

| | |
|---|---|
| Presión de operación / Operating pressure | Max. 10 Bar / 1000 kPa / 145 Psig |
| Rango de presión de salida FRM / Outlet pressure range FRM | Ver tabla de Selección / See Set point Table |
| Temperatura máxima ambiental / Ambient maximum temperature | 60 ºC / 145ºF |
| Temperatura minima ambiental / Ambient minimum temperature | -20 ºC / -10 ºF |
| Fluido / Flow | Gas Natural, GLP / Natural Gas, LPG |
| Posición de montaje / Mounting Position | 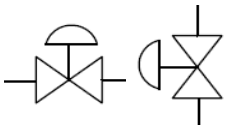 *Puede variar el tarado para presiones inferiores a 300 mbar / for pressures below 300 mbar setpoint can be altered |
| Tipo de Construcción / Construction Type: | DS (De resistencia diferencial) / DS (Diferential strenght) |
| Materiales / Materials — Cuerpo / Body | Hierro fundido / Cast iron EN GJS 500-7 or EN GJS 400-15 |
| Actuador / Actuator | Aluminio / Aluminium |
| Membranas / Membranes | NBR EN549 conform |
| Diametro Nominal / Nominal Diameter | Rosca 1" BSP o NPT / Thread 1" BSP or NPT |

| | BSP / SAV | BSP | NPT / SAV | NPT |
|---|---|---|---|---|
| Codigo de producto / Product's code | 279043 | 279055 | 280225 | 280237 |

Producto diseñado acorde a las normas EN-334 y EN-14382 / Product designed in accordance to EN-334 and EN-14382
Categoría III (Regulador) y IV (Válvula de seguridad) acorde a PED 2014/68/UE & CRN B51.14 pendiente
Product category III (Regulator) and IV (Safety valve) according to PED 2014/68/UE & CRN B51.14 pending

| Muelle de regulación / Regulation spring | | | | | | | | | | | |
|---|---|---|---|---|---|---|---|---|---|---|---|
| Ø hilo / wire | Rango / Range (min-Max) | | | | | | | | | Color/Color | codigo/code |
| 3,2 | 80 | 150 | (mbar) | 8 | 15 | (kPa) | 30 | 2,2 | ("WC) | blanco/white | 287676 |
| 3,5 | 100 | 200 | (mbar) | 10 | 20 | (kPa) | 40 | 2,9 | ("WC) | amarillo/yellow | 287279 |
| 3,7 | 130 | 250 | (mbar) | 13 | 25 | (kPa) | 1,9 | 3,6 | (psig) | azul/blue | 287280 |
| 4 | 180 | 350 | (mbar) | 18 | 35 | (kPa) | 2,6 | 5,1 | (psig) | negro/black | 287284 |
| 4,3 | 200 | 400 | (mbar) | 20 | 40 | (kPa) | 2,9 | 5,8 | (psig) | lila/purple | 287287 |

| Muelle de mínima presión / Under pressure spring (UPSO) | | | | | | | | | | | |
|---|---|---|---|---|---|---|---|---|---|---|---|
| Ø hilo / wire | Rango / Range (min-Max) | | | | | | | | | Color/Color | codigo/code |
| 2 | 35 | 110 | (mbar) | 3,5 | 11 | (kPa) | 10 | 40 | ("WC) | lila/purple | 270176 |
| 2,3 | 50 | 250 | (mbar) | 5 | 25 | (kPa) | 20 | 3,6 | ("WC) | naranja/orange | 270177 |
| 2,5 | 80 | 400 | (mbar) | 8 | 40 | (kPa) | 30 | 5,8 | ("WC) | plata/silver | 270178 |

| Muelle de máxima presión / Over pressure spring (OPSO) | | | | | | | | | | | |
|---|---|---|---|---|---|---|---|---|---|---|---|
| Ø hilo / wire | Rango / Range (min-Max) | | | | | | | | | Color/Color | codigo/code |
| 2,5 | 180 | 290 | (mbar) | 18 | 29 | (kPa) | 2,6 | 4,2 | (psig) | azul/blue | 270182 |
| 2,75 | 230 | 370 | (mbar) | 23 | 37 | (kPa) | 3,3 | 5,4 | (psig) | negro/black | 270183 |
| 3,25 | 300 | 500 | (mbar) | 30 | 50 | (kPa) | 4,4 | 7,3 | (psig) | lila/purple | 270184 |
| 3,5 | 400 | 800 | (mbar) | 40 | 80 | (kPa) | 5,8 | 11,6 | (psig) | rosa/pink | 270185 |

| Orificios / Orifices | | | | | | |
|---|---|---|---|---|---|---|
| Medida/size | Ø6 | Ø8 | Ø10 | Ø12 | | |
| $P_{umax}$* (bar/psig) | 10 / 145 | 10 / 145 | 10 / 145 | 10 / 145 | | |

*Máxima presión de entrada / Maximum inlet pressure

Regulador de gas para media presión / Gas regulator for medium pressure
**FRM-NOC 10010 MD / SAV MD**

DUNGS®
Combustion Controls

**Tablas de caudal / Flow tables (SI units)**

| Ø6 | Pressures (Bar) vs Flow ($Nm^3/h$) | | | | | | | |
|---|---|---|---|---|---|---|---|---|
| **Pin / Pout** | **0,08** | **0,1** | **0,15** | **0,2** | **0,25** | **0,3** | **0,35** | **0,4** |
| **0,2** | 13 | 12 | 9 | - | - | - | - | - |
| **0,3** | 18 | 17 | 15 | 13 | 9 | - | - | - |
| **0,4** | 22 | 21 | 20 | 18 | 16 | 13 | 10 | - |
| **0,5** | 25 | 25 | 24 | 22 | 21 | 19 | 17 | 14 |
| **0,75** | 32 | 31 | 31 | 30 | 29 | 28 | 27 | 26 |
| **1** | 37 | 37 | 37 | 36 | 36 | 35 | 35 | 34 |
| **1,5** | 46 | 46 | 46 | 46 | 46 | 46 | 46 | 46 |
| **2** | 56 | 56 | 56 | 56 | 56 | 56 | 56 | 56 |
| **3** | 74 | 74 | 74 | 74 | 74 | 74 | 74 | 74 |
| **4** | 93 | 93 | 93 | 93 | 93 | 93 | 93 | 93 |
| **5** | 111 | 111 | 111 | 111 | 111 | 111 | 111 | 111 |
| **6** | 130 | 130 | 130 | 130 | 130 | 130 | 130 | 130 |
| **7** | 148 | 148 | 148 | 148 | 148 | 148 | 148 | 148 |
| **8** | 167 | 167 | 167 | 167 | 167 | 167 | 167 | 167 |
| **9** | 185 | 185 | 185 | 185 | 185 | 185 | 185 | 185 |
| **10** | 204 | 204 | 204 | 204 | 204 | 204 | 204 | 204 |

*Datos en azul corresponden a toma externa / Values in blue correspond to external impulse

d=0,83 $Kg/m^3$ AC 10

| Ø8 | Pressures (Bar) vs Flow ($Nm^3/h$) | | | | | | | |
|---|---|---|---|---|---|---|---|---|
| **Pin / Pout** | **0,08** | **0,1** | **0,15** | **0,2** | **0,25** | **0,3** | **0,35** | **0,4** |
| **0,2** | 23 | 22 | 16 | 0 | - | - | - | - |
| **0,3** | 32 | 31 | 27 | 23 | 16 | 0 | - | - |
| **0,4** | 38 | 37 | 35 | 32 | 28 | 23 | 17 | 0 |
| **0,5** | 44 | 43 | 41 | 39 | 36 | 33 | 29 | 24 |
| **0,75** | 55 | 55 | 54 | 52 | 51 | 49 | 47 | 45 |
| **1** | 64 | 64 | 64 | 63 | 62 | 61 | 60 | 59 |
| **1,5** | 80 | 80 | 80 | 80 | 80 | 80 | 80 | 79 |
| **2** | 95 | 95 | 95 | 95 | 95 | 95 | 95 | 95 |
| **3** | 124 | 124 | 124 | 124 | 124 | 124 | 124 | 124 |
| **4** | 153 | 153 | 153 | 153 | 153 | 153 | 153 | 153 |
| **5** | 180 | 180 | 180 | 180 | 180 | 180 | 180 | 180 |
| **6** | 207 | 207 | 207 | 207 | 207 | 207 | 207 | 207 |
| **7** | 232 | 232 | 232 | 232 | 232 | 232 | 232 | 232 |
| **8** | 257 | 257 | 257 | 257 | 257 | 257 | 257 | 257 |
| **9** | 280 | 280 | 280 | 280 | 280 | 280 | 280 | 280 |
| **10** | 303 | 303 | 303 | 303 | 303 | 303 | 303 | 303 |

*Datos en azul corresponden a toma externa / Values in blue correspond to external impulse

d=0,83 $Kg/m^3$ AC 10

DUNGS®
Combustion Controls

**Tablas de caudal / Flow tables (SI units)**

| Ø10 | Pressures (Bar) vs Flow ($Nm^3/h$) | | | | | | | |
|---|---|---|---|---|---|---|---|---|
| **Pin / Pout** | **0,08** | **0,1** | **0,15** | **0,2** | **0,25** | **0,3** | **0,35** | **0,4** |
| **0,2** | 31 | 28 | 20 | - | - | - | - | - |
| **0,3** | 41 | 40 | 35 | 29 | 21 | - | - | - |
| **0,4** | 50 | 49 | 45 | 41 | 37 | 31 | 22 | - |
| **0,5** | 57 | 56 | 54 | 51 | 47 | 43 | 38 | 32 |
| **0,75** | 71 | 71 | 70 | 68 | 66 | 64 | 62 | 59 |
| **1** | 83 | 83 | 83 | 82 | 81 | 80 | 78 | 76 |
| **1,5** | 103 | 103 | 103 | 103 | 103 | 103 | 103 | 102 |
| **2** | 122 | 122 | 122 | 122 | 122 | 122 | 122 | 122 |
| **3** | 159 | 159 | 159 | 159 | 159 | 159 | 159 | 159 |
| **4** | 193 | 193 | 193 | 193 | 193 | 193 | 193 | 193 |
| **5** | 225 | 225 | 225 | 225 | 225 | 225 | 225 | 225 |
| **6** | 256 | 256 | 256 | 256 | 256 | 256 | 256 | 256 |
| **7** | 284 | 284 | 284 | 284 | 284 | 284 | 284 | 284 |
| **8** | 311 | 311 | 311 | 311 | 311 | 311 | 311 | 311 |
| **9** | 0 | 335 | 335 | 335 | 335 | 335 | 335 | 335 |
| **10** | 0 | 0 | 358 | 358 | 358 | 358 | 358 | 358 |

*Datos en azul corresponden a toma externa / Values in blue correspond to external impulse

d=0,83 $Kg/m^3$ AC 10

| Ø12 | Pressures (Bar) vs Flow ($Nm^3/h$) | | | | | | | |
|---|---|---|---|---|---|---|---|---|
| **Pin / Pout** | **0,08** | **0,1** | **0,15** | **0,2** | **0,25** | **0,3** | **0,35** | **0,4** |
| **0,2** | 35 | 32 | 23 | - | - | - | - | - |
| **0,3** | 47 | 45 | 40 | 33 | 24 | - | - | - |
| **0,4** | 56 | 55 | 51 | 47 | 41 | 34 | 25 | - |
| **0,5** | 64 | 63 | 60 | 57 | 53 | 48 | 43 | 35 |
| **0,75** | 79 | 79 | 77 | 76 | 74 | 71 | 68 | 65 |
| **1** | 91 | 91 | 90 | 90 | 89 | 87 | 86 | 84 |
| **1,5** | 111 | 111 | 111 | 111 | 111 | 110 | 110 | 110 |
| **2** | 128 | 128 | 128 | 128 | 128 | 128 | 128 | 128 |
| **3** | 159 | 159 | 159 | 159 | 159 | 159 | 159 | 159 |
| **4** | 183 | 183 | 183 | 183 | 183 | 183 | 183 | 183 |
| **5** | 256 | 256 | 256 | 256 | 256 | 256 | 256 | 256 |
| **6** | 298 | 298 | 298 | 298 | 298 | 298 | 298 | 298 |
| **7** | 0 | 341 | 341 | 341 | 341 | 341 | 341 | 341 |
| **8** | 0 | 0 | 383 | 383 | 383 | 383 | 383 | 383 |
| **9** | 0 | 0 | 0 | 426 | 426 | 426 | 426 | 426 |
| **10** | 0 | 0 | 0 | 0 | 468 | 468 | 468 | 468 |

*Datos en azul corresponden a toma externa / Values in blue correspond to external impulse

d=0,83 $Kg/m^3$ AC 10

DUNGS®
Combustion Controls

**Tablas de caudal / Flow tables (Imperial units)**

| Ø6 | Pressures (Psig/"WC) vs Flow (SCFH) | | | | | | | |
|---|---|---|---|---|---|---|---|---|
| **Pin / Pout** | **32 "WC** | **40 "WC** | **60 "WC** | **80 "WC** | **100 "WC** | **121 "WC** | **141 "WC** | **161 "WC** |
| **3 Psig** | 473 | 436 | 315 | - | - | - | - | - |
| **4 Psig** | 641 | 616 | 546 | 455 | 328 | - | - | - |
| **6 Psig** | 773 | 755 | 704 | 644 | 569 | 473 | 341 | - |
| **7 Psig** | 885 | 872 | 834 | 788 | 734 | 670 | 591 | 491 |
| **11 Psig** | 1118 | 1111 | 1091 | 1067 | 1038 | 1004 | 965 | 919 |
| **15 Psig** | 1310 | 1308 | 1299 | 1287 | 1272 | 1253 | 1230 | 1203 |
| **22 Psig** | 1642 | 1642 | 1642 | 1642 | 1642 | 1640 | 1636 | 1629 |
| **29 Psig** | 1968 | 1968 | 1968 | 1968 | 1968 | 1968 | 1968 | 1968 |
| **44 Psig** | 2621 | 2621 | 2621 | 2621 | 2621 | 2621 | 2621 | 2621 |
| **58 Psig** | 3275 | 3275 | 3275 | 3275 | 3275 | 3275 | 3275 | 3275 |
| **73 Psig** | 3928 | 3928 | 3928 | 3928 | 3928 | 3928 | 3928 | 3928 |
| **87 Psig** | 4581 | 4581 | 4581 | 4581 | 4581 | 4581 | 4581 | 4581 |
| **102 Psig** | 5234 | 5234 | 5234 | 5234 | 5234 | 5234 | 5234 | 5234 |
| **116 Psig** | 5888 | 5888 | 5888 | 5888 | 5888 | 5888 | 5888 | 5888 |
| **131 Psig** | 6541 | 6541 | 6541 | 6541 | 6541 | 6541 | 6541 | 6541 |
| **145 Psig** | 7194 | 7194 | 7194 | 7194 | 7194 | 7194 | 7194 | 7194 |

*Datos en azul corresponden a toma externa / Values in blue correspond to external impulse

d=0,05 lb/ft$^3$ AC 10

| Ø8 | Pressures (Psig/"WC) vs Flow (SCFH) | | | | | | | |
|---|---|---|---|---|---|---|---|---|
| **Pin / Pout** | **32 "WC** | **40 "WC** | **60 "WC** | **80 "WC** | **100 "WC** | **121 "WC** | **141 "WC** | **161 "WC** |
| **3 Psig** | 829 | 763 | 552 | 0 | - | - | - | - |
| **4 Psig** | 1120 | 1078 | 954 | 796 | 574 | 0 | - | - |
| **6 Psig** | 1349 | 1318 | 1230 | 1124 | 993 | 827 | 595 | 0 |
| **7 Psig** | 1543 | 1520 | 1453 | 1374 | 1280 | 1167 | 1030 | 856 |
| **11 Psig** | 1941 | 1930 | 1895 | 1853 | 1803 | 1744 | 1675 | 1595 |
| **15 Psig** | 2266 | 2262 | 2247 | 2226 | 2199 | 2167 | 2127 | 2081 |
| **22 Psig** | 2817 | 2817 | 2817 | 2817 | 2817 | 2815 | 2807 | 2795 |
| **29 Psig** | 3351 | 3351 | 3351 | 3351 | 3351 | 3351 | 3351 | 3351 |
| **44 Psig** | 4393 | 4393 | 4393 | 4393 | 4393 | 4393 | 4393 | 4393 |
| **58 Psig** | 5399 | 5399 | 5399 | 5399 | 5399 | 5399 | 5399 | 5399 |
| **73 Psig** | 6370 | 6370 | 6370 | 6370 | 6370 | 6370 | 6370 | 6370 |
| **87 Psig** | 7305 | 7305 | 7305 | 7305 | 7305 | 7305 | 7305 | 7305 |
| **102 Psig** | 8205 | 8205 | 8205 | 8205 | 8205 | 8205 | 8205 | 8205 |
| **116 Psig** | 9070 | 9070 | 9070 | 9070 | 9070 | 9070 | 9070 | 9070 |
| **131 Psig** | 9900 | 9900 | 9900 | 9900 | 9900 | 9900 | 9900 | 9900 |
| **145 Psig** | 10694 | 10694 | 10694 | 10694 | 10694 | 10694 | 10694 | 10694 |

*Datos en azul corresponden a toma externa / Values in blue correspond to external impulse

d=0,05 lb/ft$^3$ AC 10

DUNGS®
Combustion Controls

**Tablas de caudal / Flow tables (Imperial units)**

| Ø10 | Pressures (Psig/"WC) vs Flow (SCFH) | | | | | | | |
|---|---|---|---|---|---|---|---|---|
| **Pin / Pout** | **32 "WC** | **40 "WC** | **60 "WC** | **80 "WC** | **100 "WC** | **121 "WC** | **141 "WC** | **161 "WC** |
| **3 Psig** | 1082 | 997 | 720 | - | - | - | - | - |
| **4 Psig** | 1461 | 1406 | 1245 | 1038 | 749 | - | - | - |
| **6 Psig** | 1758 | 1718 | 1603 | 1464 | 1294 | 1077 | 776 | - |
| **7 Psig** | 2010 | 1979 | 1892 | 1789 | 1667 | 1520 | 1341 | 1115 |
| **11 Psig** | 2523 | 2508 | 2463 | 2408 | 2343 | 2266 | 2177 | 2073 |
| **15 Psig** | 2939 | 2933 | 2914 | 2887 | 2852 | 2810 | 2759 | 2699 |
| **22 Psig** | 3638 | 3638 | 3638 | 3638 | 3638 | 3634 | 3625 | 3610 |
| **29 Psig** | 4309 | 4309 | 4309 | 4309 | 4309 | 4309 | 4309 | 4309 |
| **44 Psig** | 5597 | 5597 | 5597 | 5597 | 5597 | 5597 | 5597 | 5597 |
| **58 Psig** | 6815 | 6815 | 6815 | 6815 | 6815 | 6815 | 6815 | 6815 |
| **73 Psig** | 7962 | 7962 | 7962 | 7962 | 7962 | 7962 | 7962 | 7962 |
| **87 Psig** | 9039 | 9039 | 9039 | 9039 | 9039 | 9039 | 9039 | 9039 |
| **102 Psig** | 10045 | 10045 | 10045 | 10045 | 10045 | 10045 | 10045 | 10045 |
| **116 Psig** | 10980 | 10980 | 10980 | 10980 | 10980 | 10980 | 10980 | 10980 |
| **131 Psig** | 0 | 11844 | 11844 | 11844 | 11844 | 11844 | 11844 | 11844 |
| **145 Psig** | 0 | 0 | 12639 | 12639 | 12639 | 12639 | 12639 | 12639 |

*Datos en azul corresponden a toma externa / Values in blue correspond to external impulse

d=0,05 lb/ft$^3$ AC 10

| Ø12 | Pressures (Psig/"WC) vs Flow (SCFH) | | | | | | | |
|---|---|---|---|---|---|---|---|---|
| **Pin / Pout** | **32 "WC** | **40 "WC** | **60 "WC** | **80 "WC** | **100 "WC** | **121 "WC** | **141 "WC** | **161 "WC** |
| **3 Psig** | 1225 | 1129 | 816 | - | - | - | - | - |
| **4 Psig** | 1648 | 1586 | 1404 | 1171 | 845 | - | - | - |
| **6 Psig** | 1976 | 1930 | 1801 | 1645 | 1454 | 1210 | 872 | - |
| **7 Psig** | 2249 | 2215 | 2118 | 2002 | 1865 | 1701 | 1501 | 1248 |
| **11 Psig** | 2795 | 2778 | 2728 | 2668 | 2596 | 2511 | 2412 | 2297 |
| **15 Psig** | 3222 | 3216 | 3195 | 3165 | 3127 | 3081 | 3024 | 2959 |
| **22 Psig** | 3904 | 3904 | 3904 | 3904 | 3904 | 3900 | 3890 | 3874 |
| **29 Psig** | 4522 | 4522 | 4522 | 4522 | 4522 | 4522 | 4522 | 4522 |
| **44 Psig** | 5597 | 5597 | 5597 | 5597 | 5597 | 5597 | 5597 | 5597 |
| **58 Psig** | 6461 | 6461 | 6461 | 6461 | 6461 | 6461 | 6461 | 6461 |
| **73 Psig** | 9024 | 9024 | 9024 | 9024 | 9024 | 9024 | 9024 | 9024 |
| **87 Psig** | 10524 | 10524 | 10524 | 10524 | 10524 | 10524 | 10524 | 10524 |
| **102 Psig** | 0 | 12025 | 12025 | 12025 | 12025 | 12025 | 12025 | 12025 |
| **116 Psig** | 0 | 0 | 13526 | 13526 | 13526 | 13526 | 13526 | 13526 |
| **131 Psig** | 0 | 0 | 0 | 15027 | 15027 | 15027 | 15027 | 15027 |
| **145 Psig** | 0 | 0 | 0 | 0 | 16527 | 16527 | 16527 | 16527 |

*Datos en azul corresponden a toma externa / Values in blue correspond to external impulse

d=0,05 lb/ft$^3$ AC 10

Plano CAD, no cambiar manualmente!
CAD-Drawing, do not change manually!

This design and/or document is proprietary and protected by copyright.
It may not, without our prior express consent, be copied nor transmitted
to any third party. It must be returned to us upon discharge of the order.

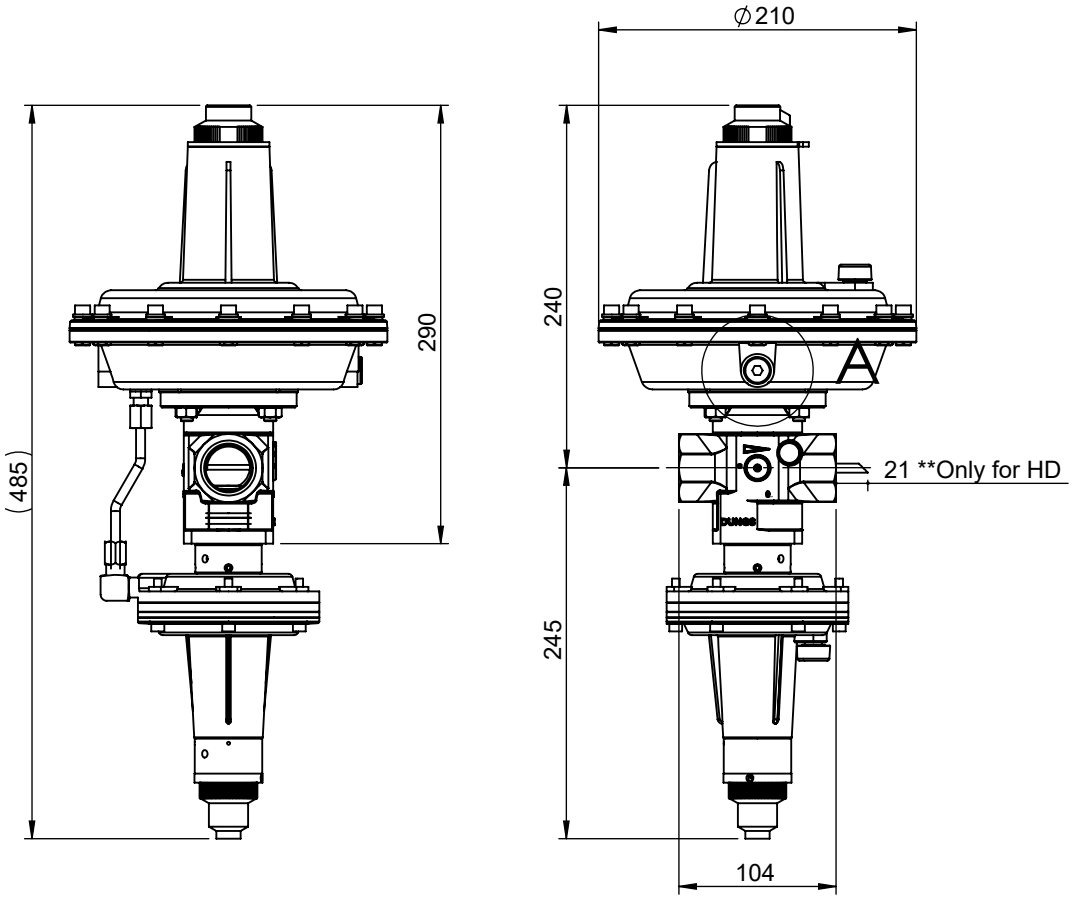


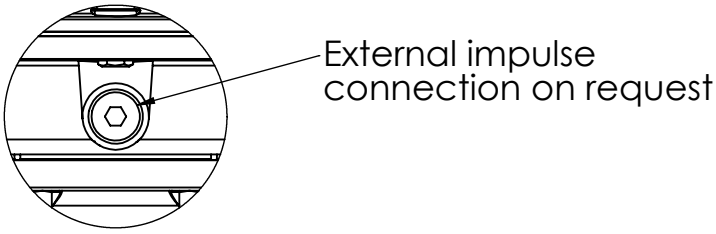


DETALLE A
ESCALA 2 : 5

3D

| Rev | Descripción Modificación | Fecha | Nom |
|---|---|---|---|
| | | | |

**Karl Dungs S.L.U.**
Combustion Controls
Avinguda de Can Roqueta, 15 - Pol. Can Roqueta
E-08202 - Sabadell
Barcelona - ESPAÑA

| | Fecha | Nombre | Firmado |
|---|---|---|---|
| Dibujado | 31/10/2018 | J.Inglés | |
| Verificado | 31/10/2018 | A.Rof | |
| Aprobado | 31/10/2018 | GX | |

Tolerancias según ISO 2768
TOLERANCIAS GENERALES ISO 2768-mK
(MEDIUM) TOLERANCIAS LINEALES
Roscas a 6g/6H y longitudes +1.0/-0

Rz 12.5 ( )

Eliminar rebabas y cantos vivos

Escala: 1:5

Material:

Acabado:

Tratamiento:

Peso: 6789.51 gr.

Descripción:
DIMENSIONS FRM-NOC10010ND/MD/HD

| Código Pieza | Rev. | Formato | Pág. |
|---|---|---|---|
| FRM-NOC10010ND_MD_HD | 0 | A4 | 1 de 1 |

Ubicación Fichero: O:\Eng Dep\Products\Assemblies\Pressure Regulators\Industrial\FRM NC\8010\3D\

Index:

Dimensiones en mm

Queda prohibida la preproducción total o parcial de este documento
y del contenido del mismo sin la autorización escrita de Karl Dungs S.L.U.
Todos los derechos reservados.

## ESPECIFICACIONES TÉCNICAS / TECHNICAL SPECIFICATION

DUNGS®
Combustion Controls

Regulador de presión con válvula de seguridad, conforme a las normas EN-334 y EN-14382 /
Pressure regulator with safety shut-off valve, in accordance with the standards EN-334 and EN-14382

| | |
|---|---|
| Presión de operación / Operating pressure | Max. 10 Bar / 1000 kPa / 145 Psig |
| Rango de presión de salida FRM / Outlet pressure range FRM | Ver tabla de Selección / See Set point Table |
| Temperatura máxima ambiental / Ambient maximum temperature | 60 ºC / 145ºF |
| Temperatura minima ambiental / Ambient minimum temperature | -20 ºC / -10 ºF |
| Fluido / Flow | Gas Natural, GLP / Natural Gas, LPG |
| Posición de montaje / Mounting Position | 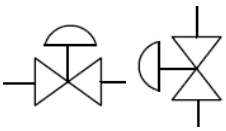 *Puede variar el tarado para presiones inferiores a 300 mbar / for pressures below 300 mbar setpoint can be altered |
| Tipo de Construcción / Construction Type: | DS (De resistencia diferencial) / DS (Diferential strenght) |
| Materiales / Materials — Cuerpo / Body | Hierro fundido / Cast iron EN GJS 500-7 or EN GJS 400-15 |
| Actuador / Actuator | Aluminio / Aluminium |
| Membranas / Membranes | NBR EN549 conform |
| Diametro Nominal / Nominal Diameter | Rosca 1" BSP o NPT / Thread 1" BSP or NPT |

| | BSP / SAV | BSP | NPT / SAV | NPT |
|---|---|---|---|---|
| Codigo de producto / Product's code | 279044 | 279058 | 280226 | 280238 |

Producto diseñado acorde a las normas EN-334 y EN-14382 / Product designed in accordance to EN-334 and EN-14382
Categoría III (Regulador) y IV (Válvula de seguridad) acorde a PED 2014/68/UE & CRN B51.14 pendiente
Product category III (Regulator) and IV (Safety valve) according to PED 2014/68/UE & CRN B51.14 pending

| Muelle de regulación / Regulation spring | | | | | | | | | | | |
|---|---|---|---|---|---|---|---|---|---|---|---|
| Ø hilo / wire | Rango / Range (min-Max) | | | | | | | | | Color/Color | codigo/code |
| 4,5 | 300 | 500 | (mbar) | 30 | 50 | (kPa) | 4,4 | 7,3 | (psig) | blanco/white | 286355 |
| 5 | 450 | 700 | (mbar) | 45 | 70 | (kPa) | 6,5 | 10,2 | (psig) | amarillo/yellow | 286356 |
| 5,5 | 550 | 900 | (mbar) | 55 | 90 | (kPa) | 8 | 13,1 | (psig) | azul/blue | 286357 |
| 6 | 650 | 1150 | (mbar) | 65 | 115 | (kPa) | 9,4 | 16,7 | (psig) | negro/black | 286358 |
| 6,5 | 1000 | 1500 | (mbar) | 100 | 150 | (kPa) | 14,5 | 21,8 | (psig) | lila/purple | 286359 |

| Muelle de mínima presión / Under pressure spring (UPSO) | | | | | | | | | | | |
|---|---|---|---|---|---|---|---|---|---|---|---|
| Ø hilo / wire | Rango / Range (min-Max) | | | | | | | | | Color/Color | codigo/code |
| 2,5 | 150 | 500 | (mbar) | 15 | 50 | (kPa) | 2,2 | 7,3 | (psig) | lila/purple | 270178 |
| 2,8 | 300 | 1000 | (mbar) | 30 | 100 | (kPa) | 4,4 | 14,5 | (psig) | naranja/orange | 270179 |
| 3 | 800 | 1400 | (mbar) | 80 | 140 | (kPa) | 11,6 | 20,3 | (psig) | plata/silver | 270180 |

| Muelle de máxima presión / Over pressure spring (OPSO) | | | | | | | | | | | |
|---|---|---|---|---|---|---|---|---|---|---|---|
| Ø hilo / wire | Rango / Range (min-Max) | | | | | | | | | Color/Color | codigo/code |
| 3,5 | 500 | 1000 | (mbar) | 50 | 100 | (kPa) | 7,3 | 14,5 | (psig) | azul/blue | 270185 |
| 3,75 | 700 | 1300 | (mbar) | 70 | 130 | (kPa) | 10,2 | 18,9 | (psig) | negro/black | 270186 |
| 4 | 1000 | 1800 | (mbar) | 100 | 180 | (kPa) | 14,5 | 26,1 | (psig) | lila/purple | 270187 |
| 4,5 | 1300 | 2500 | (mbar) | 130 | 250 | (kPa) | 18,9 | 36,3 | (psig) | naranja/orange | 270188 |
| 4,8 | 1800 | 3500 | (mbar) | 180 | 350 | (kPa) | 26,1 | 50,8 | (psig) | rosa/pink | 270189 |

| Orificios / Orifices | | | | | | | | | | |
|---|---|---|---|---|---|---|---|---|---|---|
| Medida/size | Ø6 | | Ø8 | | Ø10 | | Ø12 | | | |
| $P_{umax}$* (bar/psig) | 10 | 145 | 10 | 145 | 10 | 145 | 10 | 145 | | |

*Máxima presión de entrada / Maximum inlet pressure

Regulador de gas para alta presión / Gas regulator for high pressure

**FRM-NOC 10010 HD / SAV HD**

DUNGS®
Combustion Controls

**Tablas de caudal / Flow tables (SI units)**

| Ø6 | Pressures (Bar) vs Flow ($Nm^3/h$) | | | | | | | |
|---|---|---|---|---|---|---|---|---|
| **Pin / Pout** | **0,3** | **0,4** | **0,5** | **0,6** | **0,8** | **1** | **1,2** | **1,5** |
| **0,2** | - | - | - | - | - | - | - | - |
| **0,3** | - | - | - | - | - | - | - | - |
| **0,4** | 12 | - | - | - | - | - | - | - |
| **0,5** | 16 | 12 | - | - | - | - | - | - |
| **0,75** | 25 | 23 | 20 | 9 | - | - | - | - |
| **1** | 31 | 29 | 28 | 23 | 14 | - | - | - |
| **1,5** | 40 | 40 | 39 | 37 | 34 | 29 | 22 | - |
| **2** | 48 | 48 | 48 | 48 | 46 | 44 | 41 | 36 |
| **3** | 64 | 64 | 64 | 64 | 64 | 64 | 63 | 62 |
| **4** | 80 | 80 | 80 | 80 | 80 | 80 | 80 | 80 |
| **5** | 96 | 96 | 96 | 96 | 96 | 96 | 96 | 96 |
| **6** | 112 | 112 | 112 | 112 | 112 | 112 | 112 | 112 |
| **7** | 128 | 128 | 128 | 128 | 128 | 128 | 128 | 128 |
| **8** | 144 | 144 | 144 | 144 | 144 | 144 | 144 | 144 |
| **9** | 160 | 160 | 160 | 160 | 160 | 160 | 160 | 160 |
| **10** | 176 | 176 | 176 | 176 | 176 | 176 | 176 | 176 |

d=0,83 $Kg/m^3$ AC 10

| Ø8 | Pressures (Bar) vs Flow ($Nm^3/h$) | | | | | | | |
|---|---|---|---|---|---|---|---|---|
| **Pin / Pout** | **0,3** | **0,4** | **0,5** | **0,6** | **0,8** | **1** | **1,2** | **1,5** |
| **0,2** | - | - | - | - | - | - | - | - |
| **0,3** | - | - | - | - | - | - | - | - |
| **0,4** | 20 | - | - | - | - | - | - | - |
| **0,5** | 28 | 21 | - | - | - | - | - | - |
| **0,75** | 42 | 39 | 34 | 16 | - | - | - | - |
| **1** | 53 | 51 | 48 | 39 | 24 | - | - | - |
| **1,5** | 69 | 69 | 68 | 64 | 59 | 51 | 37 | - |
| **2** | 83 | 83 | 83 | 82 | 80 | 76 | 70 | 62 |
| **3** | 110 | 110 | 110 | 110 | 110 | 110 | 109 | 107 |
| **4** | 138 | 138 | 138 | 138 | 138 | 138 | 138 | 138 |
| **5** | 165 | 165 | 165 | 165 | 165 | 165 | 165 | 165 |
| **6** | 193 | 193 | 193 | 193 | 193 | 193 | 193 | 193 |
| **7** | 220 | 220 | 220 | 220 | 220 | 220 | 220 | 220 |
| **8** | 248 | 248 | 248 | 248 | 248 | 248 | 248 | 248 |
| **9** | 275 | 275 | 275 | 275 | 275 | 275 | 275 | 275 |
| **10** | 303 | 303 | 303 | 303 | 303 | 303 | 303 | 303 |

d=0,83 $Kg/m^3$ AC 10

DUNGS® Combustion Controls

**Tablas de caudal / Flow tables (SI units)**

| Ø10 | Pressures (Bar) vs Flow ($Nm^3/h$) | | | | | | | |
|---|---|---|---|---|---|---|---|---|
| **Pin / Pout** | **0,3** | **0,4** | **0,5** | **0,6** | **0,8** | **1** | **1,2** | **1,5** |
| **0,2** | - | - | - | - | - | - | - | - |
| **0,3** | - | - | - | - | - | - | - | - |
| **0,4** | 29 | - | - | - | - | - | - | - |
| **0,5** | 41 | 30 | - | - | - | - | - | - |
| **0,75** | 61 | 56 | 49 | 23 | - | - | - | - |
| **1** | 77 | 74 | 70 | 57 | 35 | - | - | - |
| **1,5** | 100 | 100 | 98 | 94 | 86 | 74 | 54 | - |
| **2** | 121 | 121 | 121 | 119 | 116 | 110 | 101 | 89 |
| **3** | 161 | 161 | 161 | 161 | 161 | 160 | 158 | 154 |
| **4** | 201 | 201 | 201 | 201 | 201 | 201 | 200 | 199 |
| **5** | 241 | 241 | 241 | 241 | 241 | 241 | 240 | 239 |
| **6** | 281 | 281 | 281 | 281 | 281 | 281 | 280 | 279 |
| **7** | 321 | 321 | 321 | 321 | 321 | 321 | 319 | 319 |
| **8** | 361 | 361 | 361 | 361 | 361 | 361 | 359 | 358 |
| **9** | 401 | 401 | 401 | 401 | 401 | 401 | 399 | 398 |
| **10** | 441 | 441 | 441 | 441 | 441 | 441 | 439 | 438 |

d=0,83 $Kg/m^3$ AC 10

| Ø12 | Pressures (Bar) vs Flow ($Nm^3/h$) | | | | | | | |
|---|---|---|---|---|---|---|---|---|
| **Pin / Pout** | **0,3** | **0,4** | **0,5** | **0,6** | **0,8** | **1** | **1,2** | **1,5** |
| **0,2** | - | - | - | - | - | - | - | - |
| **0,3** | - | - | - | - | - | - | - | - |
| **0,4** | 35 | - | - | - | - | - | - | - |
| **0,5** | 50 | 36 | - | - | - | - | - | - |
| **0,75** | 75 | 67 | 58 | 27 | - | - | - | - |
| **1** | 94 | 88 | 82 | 67 | 40 | - | - | - |
| **1,5** | 123 | 119 | 116 | 109 | 99 | 84 | 62 | - |
| **2** | 147 | 144 | 142 | 139 | 134 | 126 | 116 | 102 |
| **3** | 196 | 192 | 189 | 186 | 185 | 184 | 181 | 177 |
| **4** | 245 | 240 | 236 | 233 | 231 | 230 | 229 | 228 |
| **5** | 294 | 287 | 284 | 279 | 277 | 276 | 275 | 274 |
| **6** | 343 | 335 | 331 | 326 | 323 | 321 | 320 | 320 |
| **7** | 392 | 383 | 378 | 372 | 369 | 367 | 366 | 365 |
| **8** | 441 | 431 | 425 | 419 | 415 | 413 | 412 | 411 |
| **9** | 0 | 0 | 0 | 465 | 461 | 459 | 457 | 456 |
| **10** | 0 | 0 | 0 | 0 | 507 | 505 | 503 | 502 |

d=0,83 $Kg/m^3$ AC 10

DUNGS®
Combustion Controls

**Tablas de caudal / Flow tables (Imperial units)**

| Ø6 | Pressures (Psig/"WC) vs Flow (SCFH) | | | | | | | |
|---|---|---|---|---|---|---|---|---|
| **Pin / Pout** | **4 Psig** | **6 Psig** | **7 Psig** | **9 Psig** | **12 Psig** | **15 Psig** | **17 Psig** | **22 Psig** |
| **3 Psig** | - | - | - | - | - | - | - | - |
| **4 Psig** | - | - | - | - | - | - | - | - |
| **6 Psig** | 409 | - | - | - | - | - | - | - |
| **7 Psig** | 579 | 425 | - | - | - | - | - | - |
| **11 Psig** | 869 | 795 | 695 | 331 | - | - | - | - |
| **15 Psig** | 1083 | 1040 | 983 | 810 | 494 | - | - | - |
| **22 Psig** | 1418 | 1409 | 1390 | 1323 | 1211 | 1039 | 769 | - |
| **29 Psig** | 1702 | 1702 | 1702 | 1686 | 1639 | 1558 | 1438 | 1267 |
| **44 Psig** | 2267 | 2267 | 2267 | 2267 | 2267 | 2264 | 2241 | 2194 |
| **58 Psig** | 2832 | 2832 | 2832 | 2832 | 2832 | 2832 | 2832 | 2832 |
| **73 Psig** | 3397 | 3397 | 3397 | 3397 | 3397 | 3397 | 3397 | 3397 |
| **87 Psig** | 3962 | 3962 | 3962 | 3962 | 3962 | 3962 | 3962 | 3962 |
| **102 Psig** | 4527 | 4527 | 4527 | 4527 | 4527 | 4527 | 4527 | 4527 |
| **116 Psig** | 5092 | 5092 | 5092 | 5092 | 5092 | 5092 | 5092 | 5092 |
| **131 Psig** | 5657 | 5657 | 5657 | 5657 | 5657 | 5657 | 5657 | 5657 |
| **145 Psig** | 6222 | 6222 | 6222 | 6222 | 6222 | 6222 | 6222 | 6222 |

d=0,05 lb/ft$^3$ AC 10

| Ø8 | Pressures (Psig/"WC) vs Flow (SCFH) | | | | | | | |
|---|---|---|---|---|---|---|---|---|
| **Pin / Pout** | **4 Psig** | **6 Psig** | **7 Psig** | **9 Psig** | **12 Psig** | **15 Psig** | **17 Psig** | **22 Psig** |
| **3 Psig** | - | - | - | - | - | - | - | - |
| **4 Psig** | - | - | - | - | - | - | - | - |
| **6 Psig** | 704 | - | - | - | - | - | - | - |
| **7 Psig** | 995 | 730 | - | - | - | - | - | - |
| **11 Psig** | 1493 | 1366 | 1194 | 568 | - | - | - | - |
| **15 Psig** | 1862 | 1788 | 1689 | 1392 | 849 | - | - | - |
| **22 Psig** | 2438 | 2421 | 2389 | 2273 | 2081 | 1785 | 1321 | - |
| **29 Psig** | 2926 | 2926 | 2926 | 2898 | 2817 | 2678 | 2471 | 2177 |
| **44 Psig** | 3897 | 3897 | 3897 | 3897 | 3897 | 3891 | 3851 | 3771 |
| **58 Psig** | 4868 | 4868 | 4868 | 4868 | 4868 | 4868 | 4868 | 4868 |
| **73 Psig** | 5839 | 5839 | 5839 | 5839 | 5839 | 5839 | 5839 | 5839 |
| **87 Psig** | 6810 | 6810 | 6810 | 6810 | 6810 | 6810 | 6810 | 6810 |
| **102 Psig** | 7781 | 7781 | 7781 | 7781 | 7781 | 7781 | 7781 | 7781 |
| **116 Psig** | 8752 | 8752 | 8752 | 8752 | 8752 | 8752 | 8752 | 8752 |
| **131 Psig** | 9723 | 9723 | 9723 | 9723 | 9723 | 9723 | 9723 | 9723 |
| **145 Psig** | 10694 | 10694 | 10694 | 10694 | 10694 | 10694 | 10694 | 10694 |

d=0,05 lb/ft$^3$ AC 10

DUNGS®
Combustion Controls

**Tablas de caudal / Flow tables (Imperial units)**

| Ø10 | Pressures (Psig/"WC) vs Flow (SCFH) | | | | | | | |
|---|---|---|---|---|---|---|---|---|
| **Pin / Pout** | **4 Psig** | **6 Psig** | **7 Psig** | **9 Psig** | **12 Psig** | **15 Psig** | **17 Psig** | **22 Psig** |
| **3 Psig** | - | - | - | - | - | - | - | - |
| **4 Psig** | - | - | - | - | - | - | - | - |
| **6 Psig** | 1024 | - | - | - | - | - | - | - |
| **7 Psig** | 1448 | 1062 | - | - | - | - | - | - |
| **11 Psig** | 2171 | 1987 | 1737 | 827 | - | - | - | - |
| **15 Psig** | 2708 | 2601 | 2457 | 2025 | 1236 | - | - | - |
| **22 Psig** | 3546 | 3522 | 3475 | 3307 | 3026 | 2597 | 1915 | - |
| **29 Psig** | 4256 | 4256 | 4256 | 4215 | 4098 | 3896 | 3582 | 3148 |
| **44 Psig** | 5668 | 5668 | 5668 | 5668 | 5668 | 5660 | 5583 | 5452 |
| **58 Psig** | 7081 | 7081 | 7081 | 7081 | 7081 | 7081 | 7057 | 7038 |
| **73 Psig** | 8493 | 8493 | 8493 | 8493 | 8493 | 8493 | 8464 | 8442 |
| **87 Psig** | 9905 | 9905 | 9905 | 9905 | 9905 | 9905 | 9872 | 9846 |
| **102 Psig** | 11318 | 11318 | 11318 | 11318 | 11318 | 11318 | 11279 | 11250 |
| **116 Psig** | 12730 | 12730 | 12730 | 12730 | 12730 | 12730 | 12687 | 12654 |
| **131 Psig** | 14143 | 14143 | 14143 | 14143 | 14143 | 14143 | 14095 | 14058 |
| **145 Psig** | 15555 | 15555 | 15555 | 15555 | 15555 | 15555 | 15502 | 15462 |

d=0,05 lb/ft$^3$ AC 10

| Ø12 | Pressures (Psig/"WC) vs Flow (SCFH) | | | | | | | |
|---|---|---|---|---|---|---|---|---|
| **Pin / Pout** | **4 Psig** | **6 Psig** | **7 Psig** | **9 Psig** | **12 Psig** | **15 Psig** | **17 Psig** | **22 Psig** |
| **3 Psig** | - | - | - | - | - | - | - | - |
| **4 Psig** | - | - | - | - | - | - | - | - |
| **6 Psig** | 1251 | - | - | - | - | - | - | - |
| **7 Psig** | 1769 | 1269 | - | - | - | - | - | - |
| **11 Psig** | 2654 | 2374 | 2048 | 960 | - | - | - | - |
| **15 Psig** | 3310 | 3108 | 2897 | 2352 | 1423 | - | - | - |
| **22 Psig** | 4333 | 4208 | 4097 | 3841 | 3487 | 2976 | 2194 | - |
| **29 Psig** | 5201 | 5085 | 5018 | 4896 | 4721 | 4464 | 4105 | 3607 |
| **44 Psig** | 6927 | 6772 | 6683 | 6584 | 6530 | 6487 | 6397 | 6247 |
| **58 Psig** | 8653 | 8460 | 8348 | 8224 | 8157 | 8115 | 8086 | 8064 |
| **73 Psig** | 10379 | 10148 | 10014 | 9865 | 9784 | 9733 | 9699 | 9673 |
| **87 Psig** | 12105 | 11835 | 11679 | 11505 | 11411 | 11352 | 11311 | 11282 |
| **102 Psig** | 13831 | 13523 | 13344 | 13146 | 13038 | 12971 | 12924 | 12891 |
| **116 Psig** | 15557 | 15211 | 15010 | 14787 | 14665 | 14589 | 14537 | 14499 |
| **131 Psig** | 0 | 0 | 0 | 16427 | 16293 | 16208 | 16150 | 16108 |
| **145 Psig** | 0 | 0 | 0 | 0 | 17920 | 17827 | 17763 | 17717 |

d=0,05 lb/ft$^3$ AC 10

Plano CAD, no cambiar manualmente!
CAD-Drawing, do not change manually!

This design and/or document is proprietary and protected by copyright.
It may not, without our prior express consent, be copied nor transmitted
to any third party. It must be returned to us upon discharge of the order.

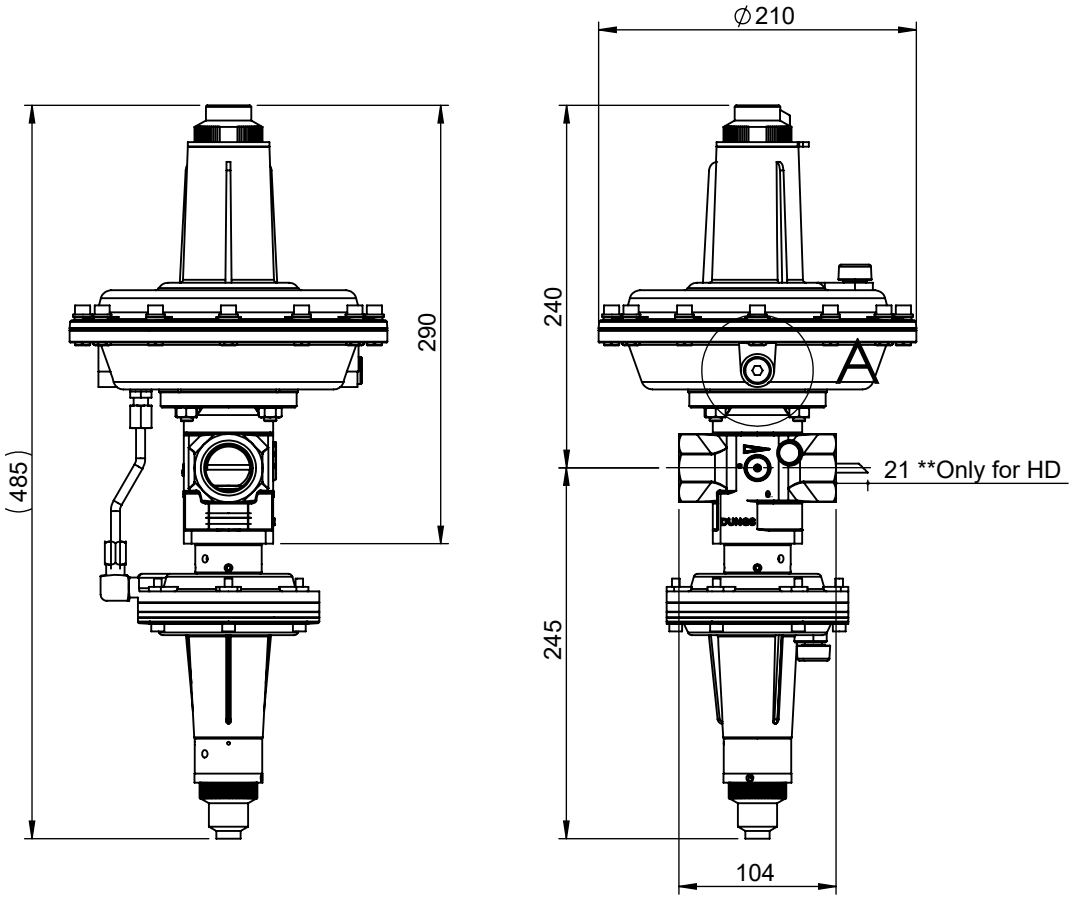


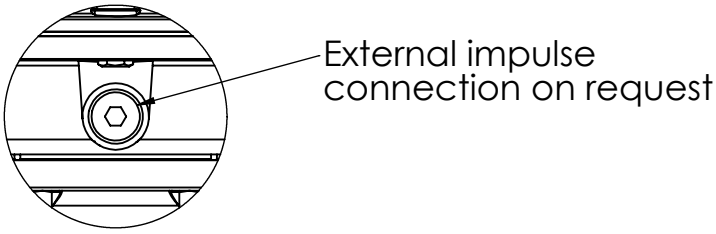


DETALLE A
ESCALA 2 : 5

3D

| Rev | Descripción Modificación | Fecha | Nom |
|---|---|---|---|
| | | | |

**Karl Dungs S.L.U.**
Combustion Controls
Avinguda de Can Roqueta, 15 - Pol. Can Roqueta
E-08202 - Sabadell
Barcelona - ESPAÑA

| | Fecha | Nombre | Firmado |
|---|---|---|---|
| Dibujado | 31/10/2018 | J.Inglés | |
| Verificado | 31/10/2018 | A.Rof | |
| Aprobado | 31/10/2018 | GX | |

Tolerancias según ISO 2768
TOLERANCIAS GENERALES ISO 2768-mK
(MEDIUM) TOLERANCIAS LINEALES
Roscas a 6g/6H y longitudes +1.0/-0

Rz 12.5 ( )

Eliminar rebabas y cantos vivos

Escala: 1:5

Material:

Acabado:

Tratamiento:

Peso: 6789.51 gr.

Descripción:
DIMENSIONS FRM-NOC10010ND/MD/HD

| Código Pieza | Rev. | Formato | Pág. |
|---|---|---|---|
| FRM-NOC10010ND_MD_HD | 0 | A4 | 1 de 1 |

Ubicación Fichero: O:\Eng Dep\Products\Assemblies\Pressure Regulators\Industrial\FRM NC\8010\3D\

Index:

Dimensiones en mm

Queda prohibida la preproducción total o parcial de este documento
y del contenido del mismo sin la autorización escrita de Karl Dungs S.L.U.
Todos los derechos reservados.

## ESPECIFICACIONES TÉCNICAS / TECHNICAL SPECIFICATION

DUNGS®
Combustion Controls

Regulador de presión con válvula de seguridad, conforme a las normas EN-334 y EN-14382 /
Pressure regulator with safety shut-off valve, in accordance with the standards EN-334 and EN-14382

| | |
|---|---|
| Presión de operación / Operating pressure | Max. 10 Bar / 1000 kPa / 145 Psig |
| Rango de presión de salida FRM / Outlet pressure range FRM | Ver tabla de Selección / See Set point Table |
| Temperatura máxima ambiental / Ambient maximum temperature | 60 ºC / 145ºF |
| Temperatura minima ambiental / Ambient minimum temperature | -20 ºC / -10 ºF |
| Fluido / Flow | Gas Natural, GLP / Natural Gas, LPG |
| Posición de montaje / Mounting Position | 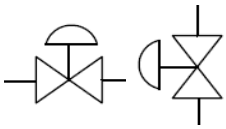 *Puede variar el tarado para presiones inferiores a 300 mbar / for pressures below 300 mbar setpoint can be altered |
| Tipo de Construcción / Construction Type: | DS (De resistencia diferencial) / DS (Diferential strenght) |
| Materiales / Materials — Cuerpo / Body | Hierro fundido / Cast iron EN GJS 500-7 or EN GJS 400-15 |
| Actuador / Actuator | Aluminio / Aluminium |
| Membranas / Membranes | NBR EN549 conform |
| Diametro Nominal / Nominal Diameter | Rosca 1" BSP o NPT / Thread 1" BSP or NPT |

| | BSP / SAV | BSP | NPT / SAV | NPT |
|---|---|---|---|---|
| Codigo de producto / Product's code | 279083 | 279095 | 280258 | 280270 |

Producto diseñado acorde a las normas EN-334 y EN-14382 / Product designed in accordance to EN-334 and EN-14382
Categoría III (Regulador) y IV (Válvula de seguridad) acorde a PED 2014/68/UE & CRN B51.14 pendiente
Product category III (Regulator) and IV (Safety valve) according to PED 2014/68/UE & CRN B51.14 pending

| Muelle de regulación / Regulation spring | | | | | | | | | | | |
|---|---|---|---|---|---|---|---|---|---|---|---|
| Ø hilo / wire | Rango / Range (min-Max) | | | | | | | | | Color/Color | codigo/code |
| 10 | 1000 | 1600 | (mbar) | 100 | 160 | (kPa) | 14,5 | 23,2 | (psig) | lila/purple | 286389 |
| 11 | 1500 | 2400 | (mbar) | 150 | 240 | (kPa) | 21,8 | 34,8 | (psig) | naranja/orange | 286390 |
| 12 | 2300 | 3600 | (mbar) | 230 | 360 | (kPa) | 33,4 | 52,2 | (psig) | rosa/pink | 286393 |
| 13 | 3500 | 4000 | (mbar) | 350 | 400 | (kPa) | 50,8 | 58 | (psig) | rojo/red | 286394 |

| Muelle de mínima presión / Under pressure spring (UPSO) | | | | | | | | | | | |
|---|---|---|---|---|---|---|---|---|---|---|---|
| Ø hilo / wire | Rango / Range (min-Max) | | | | | | | | | Color/Color | codigo/code |
| 2,5 | 150 | 500 | (mbar) | 15 | 50 | (kPa) | 2,2 | 7,3 | (psig) | lila/purple | 270178 |
| 2,8 | 300 | 1000 | (mbar) | 30 | 100 | (kPa) | 4,4 | 14,5 | (psig) | naranja/orange | 270179 |
| 3 | 800 | 1400 | (mbar) | 80 | 140 | (kPa) | 11,6 | 20,3 | (psig) | plata/silver | 270180 |
| 3,5 | 1200 | 3000 | (mbar) | 120 | 300 | (kPa) | 17,4 | 43,5 | (psig) | rosa/pink | 270124 |

| Muelle de máxima presión / Over pressure spring (OPSO) | | | | | | | | | | | |
|---|---|---|---|---|---|---|---|---|---|---|---|
| Ø hilo / wire | Rango / Range (min-Max) | | | | | | | | | Color/Color | codigo/code |
| 4,5 | 1300 | 2500 | (mbar) | 130 | 250 | (kPa) | 18,9 | 36,3 | (psig) | naranja/orange | 270188 |
| 4,8 | 1800 | 3500 | (mbar) | 180 | 350 | (kPa) | 26,1 | 50,8 | (psig) | rosa/pink | 270189 |
| 5 | 2500 | 5000 | (mbar) | 250 | 500 | (kPa) | 36,3 | 72,5 | (psig) | blanco/white | 271114 |

| Orificios / Orifices | | | | | | | | | | |
|---|---|---|---|---|---|---|---|---|---|---|
| Medida/size | Ø6 | | Ø8 | | Ø10 | | Ø12 | | | |
| $P_{umax}$* (bar/psig) | 10 | 145 | 10 | 145 | 10 | 145 | 10 | 145 | | |

*Máxima presión de entrada / Maximum inlet pressure

Regulador de gas para media presión / Gas regulator for medium pressure
**FRM-NOC 100010UHD / SAV HD**

DUNGS®
Combustion Controls

**Tablas de caudal / Flow tables (SI units)**

| Ø6 | Pressures (Bar) vs Flow ($Nm^3/h$) | | | | | | | |
|---|---|---|---|---|---|---|---|---|
| **Pin / Pout** | **1** | **1,25** | **1,5** | **1,75** | **2** | **2,5** | **3** | **4** |
| **0,2** | - | - | - | - | - | - | - | - |
| **0,3** | - | - | - | - | - | - | - | - |
| **0,4** | - | - | - | - | - | - | - | - |
| **0,5** | - | - | - | - | - | - | - | - |
| **0,75** | - | - | - | - | - | - | - | - |
| **1** | - | - | - | - | - | - | - | - |
| **1,5** | 28 | 21 | - | - | - | - | - | - |
| **2** | 40 | 36 | 31 | 23 | - | - | - | - |
| **3** | 56 | 56 | 54 | 52 | 49 | 37 | - | - |
| **4** | 70 | 70 | 70 | 70 | 69 | 64 | 56 | - |
| **5** | 84 | 84 | 84 | 84 | 84 | 83 | 79 | 63 |
| **6** | 98 | 98 | 98 | 98 | 98 | 98 | 97 | 89 |
| **7** | 112 | 112 | 112 | 112 | 112 | 112 | 112 | 109 |
| **8** | 126 | 126 | 126 | 126 | 126 | 126 | 126 | 125 |
| **9** | 140 | 140 | 140 | 140 | 140 | 140 | 140 | 140 |
| **10** | 154 | 154 | 154 | 154 | 154 | 154 | 154 | 154 |

*Datos en azul corresponden a toma externa / Values in blue correspond to external impulse

d=0,83 $Kg/m^3$ AC 10

| Ø8 | Pressures (Bar) vs Flow ($Nm^3/h$) | | | | | | | |
|---|---|---|---|---|---|---|---|---|
| **Pin / Pout** | **1** | **1,25** | **1,5** | **1,75** | **2** | **2,5** | **3** | **4** |
| **0,2** | - | - | - | - | - | - | - | - |
| **0,3** | - | - | - | - | - | - | - | - |
| **0,4** | - | - | - | - | - | - | - | - |
| **0,5** | - | - | - | - | - | - | - | - |
| **0,75** | - | - | - | - | - | - | - | - |
| **1** | - | - | - | - | - | - | - | - |
| **1,5** | 55 | 41 | - | - | - | - | - | - |
| **2** | 78 | 72 | 62 | 46 | - | - | - | - |
| **3** | 110 | 109 | 107 | 102 | 95 | 73 | - | - |
| **4** | 138 | 138 | 138 | 137 | 135 | 126 | 110 | - |
| **5** | 165 | 165 | 165 | 165 | 165 | 163 | 156 | 123 |
| **6** | 193 | 193 | 193 | 193 | 193 | 193 | 191 | 174 |
| **7** | 220 | 220 | 220 | 220 | 220 | 220 | 220 | 213 |
| **8** | 248 | 248 | 248 | 248 | 248 | 248 | 248 | 246 |
| **9** | 275 | 275 | 275 | 275 | 275 | 275 | 275 | 275 |
| **10** | 303 | 303 | 303 | 303 | 303 | 303 | 303 | 303 |

*Datos en azul corresponden a toma externa / Values in blue correspond to external impulse

d=0,83 $Kg/m^3$ AC 10

DUNGS®
Combustion Controls

**Tablas de caudal / Flow tables (SI units)**

| Ø10 | Pressures (Bar) vs Flow ($Nm^3/h$) | | | | | | | |
|---|---|---|---|---|---|---|---|---|
| **Pin / Pout** | **1** | **1,25** | **1,5** | **1,75** | **2** | **2,5** | **3** | **4** |
| **0,2** | - | - | - | - | - | - | - | - |
| **0,3** | - | - | - | - | - | - | - | - |
| **0,4** | - | - | - | - | - | - | - | - |
| **0,5** | - | - | - | - | - | - | - | - |
| **0,75** | - | - | - | - | - | - | - | - |
| **1** | - | - | - | - | - | - | - | - |
| **1,5** | 81 | 61 | - | - | - | - | - | - |
| **2** | 115 | 106 | 91 | 67 | - | - | - | - |
| **3** | 163 | 161 | 157 | 151 | 141 | 107 | - | - |
| **4** | 203 | 203 | 203 | 202 | 199 | 186 | 162 | - |
| **5** | 244 | 244 | 244 | 244 | 244 | 240 | 229 | 181 |
| **6** | 284 | 284 | 284 | 284 | 284 | 284 | 281 | 256 |
| **7** | 325 | 325 | 325 | 325 | 325 | 325 | 325 | 314 |
| **8** | 365 | 365 | 365 | 365 | 365 | 365 | 365 | 363 |
| **9** | 406 | 406 | 406 | 406 | 406 | 406 | 406 | 406 |
| **10** | 446 | 446 | 446 | 446 | 446 | 446 | 446 | 446 |

*Datos en azul corresponden a toma externa / Values in blue correspond to external impulse

d=0,83 $Kg/m^3$ AC 10

| Ø12 | Pressures (Bar) vs Flow ($Nm^3/h$) | | | | | | | |
|---|---|---|---|---|---|---|---|---|
| **Pin / Pout** | **1** | **1,25** | **1,5** | **1,75** | **2** | **2,5** | **3** | **4** |
| **0,2** | - | - | - | - | - | - | - | - |
| **0,3** | - | - | - | - | - | - | - | - |
| **0,4** | - | - | - | - | - | - | - | - |
| **0,5** | - | - | - | - | - | - | - | - |
| **0,75** | - | - | - | - | - | - | - | - |
| **1** | - | - | - | - | - | - | - | - |
| **1,5** | 94 | 75 | - | - | - | - | - | - |
| **2** | 133 | 130 | 117 | 89 | - | - | - | - |
| **3** | 188 | 198 | 202 | 199 | 186 | 142 | - | - |
| **4** | 235 | 250 | 261 | 267 | 263 | 246 | 214 | - |
| **5** | 282 | 300 | 313 | 322 | 322 | 317 | 303 | 240 |
| **6** | 329 | 350 | 365 | 375 | 375 | 375 | 371 | 339 |
| **7** | 376 | 400 | 417 | 429 | 429 | 429 | 429 | 415 |
| **8** | 422 | 449 | 469 | 482 | 482 | 482 | 482 | 479 |
| **9** | 469 | 499 | 521 | 536 | 536 | 536 | 536 | 536 |
| **10** | 516 | 549 | 574 | 589 | 589 | 589 | 589 | 589 |

*Datos en azul corresponden a toma externa / Values in blue correspond to external impulse

d=0,83 $Kg/m^3$ AC 10

DUNGS®
Combustion Controls

**Tablas de caudal / Flow tables (Imperial units)**

| Ø6 | Pressures (Psig/"WC) vs Flow (SCFH) | | | | | | | |
|---|---|---|---|---|---|---|---|---|
| **Pin / Pout** | **15 Psig** | **18 Psig** | **22 Psig** | **25 Psig** | **29 Psig** | **36 Psig** | **44 Psig** | **58 Psig** |
| **3 Psig** | - | - | - | - | - | - | - | - |
| **4 Psig** | - | - | - | - | - | - | - | - |
| **6 Psig** | - | - | - | - | - | - | - | - |
| **7 Psig** | - | - | - | - | - | - | - | - |
| **11 Psig** | - | - | - | - | - | - | - | - |
| **15 Psig** | - | - | - | - | - | - | - | - |
| **22 Psig** | 992 | 744 | - | - | - | - | - | - |
| **29 Psig** | 1403 | 1288 | 1108 | 822 | - | - | - | - |
| **44 Psig** | 1984 | 1968 | 1920 | 1837 | 1716 | 1310 | - | - |
| **58 Psig** | 2478 | 2478 | 2478 | 2465 | 2427 | 2270 | 1981 | - |
| **73 Psig** | 2973 | 2973 | 2973 | 2973 | 2973 | 2930 | 2801 | 2214 |
| **87 Psig** | 3467 | 3467 | 3467 | 3467 | 3467 | 3467 | 3431 | 3131 |
| **102 Psig** | 3961 | 3961 | 3961 | 3961 | 3961 | 3961 | 3961 | 3834 |
| **116 Psig** | 4456 | 4456 | 4456 | 4456 | 4456 | 4456 | 4456 | 4427 |
| **131 Psig** | 4950 | 4950 | 4950 | 4950 | 4950 | 4950 | 4950 | 4950 |
| **145 Psig** | 5444 | 5444 | 5444 | 5444 | 5444 | 5444 | 5444 | 5444 |

*Datos en azul corresponden a toma externa / Values in blue correspond to external impulse

d=0,05 lb/ft$^3$ AC 10

| Ø8 | Pressures (Psig/"WC) vs Flow (SCFH) | | | | | | | |
|---|---|---|---|---|---|---|---|---|
| **Pin / Pout** | **15 Psig** | **18 Psig** | **22 Psig** | **25 Psig** | **29 Psig** | **36 Psig** | **44 Psig** | **58 Psig** |
| **3 Psig** | - | - | - | - | - | - | - | - |
| **4 Psig** | - | - | - | - | - | - | - | - |
| **6 Psig** | - | - | - | - | - | - | - | - |
| **7 Psig** | - | - | - | - | - | - | - | - |
| **11 Psig** | - | - | - | - | - | - | - | - |
| **15 Psig** | - | - | - | - | - | - | - | - |
| **22 Psig** | 1948 | 1461 | - | - | - | - | - | - |
| **29 Psig** | 2755 | 2530 | 2177 | 1614 | - | - | - | - |
| **44 Psig** | 3897 | 3865 | 3771 | 3609 | 3371 | 2574 | - | - |
| **58 Psig** | 4868 | 4868 | 4868 | 4842 | 4767 | 4458 | 3890 | - |
| **73 Psig** | 5839 | 5839 | 5839 | 5839 | 5839 | 5755 | 5502 | 4348 |
| **87 Psig** | 6810 | 6810 | 6810 | 6810 | 6810 | 6810 | 6739 | 6149 |
| **102 Psig** | 7781 | 7781 | 7781 | 7781 | 7781 | 7781 | 7781 | 7531 |
| **116 Psig** | 8752 | 8752 | 8752 | 8752 | 8752 | 8752 | 8752 | 8697 |
| **131 Psig** | 9723 | 9723 | 9723 | 9723 | 9723 | 9723 | 9723 | 9723 |
| **145 Psig** | 10694 | 10694 | 10694 | 10694 | 10694 | 10694 | 10694 | 10694 |

*Datos en azul corresponden a toma externa / Values in blue correspond to external impulse

d=0,05 lb/ft$^3$ AC 10

DUNGS®
Combustion Controls

**Tablas de caudal / Flow tables (Imperial units)**

| Ø10 | Pressures (Psig/"WC) vs Flow (SCFH) | | | | | | | |
|---|---|---|---|---|---|---|---|---|
| **Pin / Pout** | **15 Psig** | **18 Psig** | **22 Psig** | **25 Psig** | **29 Psig** | **36 Psig** | **44 Psig** | **58 Psig** |
| **3 Psig** | - | - | - | - | - | - | - | - |
| **4 Psig** | - | - | - | - | - | - | - | - |
| **6 Psig** | - | - | - | - | - | - | - | - |
| **7 Psig** | - | - | - | - | - | - | - | - |
| **11 Psig** | - | - | - | - | - | - | - | - |
| **15 Psig** | - | - | - | - | - | - | - | - |
| **22 Psig** | 2869 | 2151 | - | - | - | - | - | - |
| **29 Psig** | 4058 | 3726 | 3206 | 2377 | - | - | - | - |
| **44 Psig** | 5739 | 5692 | 5553 | 5315 | 4965 | 3791 | - | - |
| **58 Psig** | 7169 | 7169 | 7169 | 7131 | 7021 | 6566 | 5730 | - |
| **73 Psig** | 8599 | 8599 | 8599 | 8599 | 8599 | 8476 | 8103 | 6404 |
| **87 Psig** | 10029 | 10029 | 10029 | 10029 | 10029 | 10029 | 9924 | 9056 |
| **102 Psig** | 11459 | 11459 | 11459 | 11459 | 11459 | 11459 | 11459 | 11092 |
| **116 Psig** | 12889 | 12889 | 12889 | 12889 | 12889 | 12889 | 12889 | 12808 |
| **131 Psig** | 14319 | 14319 | 14319 | 14319 | 14319 | 14319 | 14319 | 14319 |
| **145 Psig** | 15750 | 15750 | 15750 | 15750 | 15750 | 15750 | 15750 | 15750 |

*Datos en azul corresponden a toma externa / Values in blue correspond to external impulse

d=0,05 lb/ft$^3$ AC 10

| Ø12 | Pressures (Psig/"WC) vs Flow (SCFH) | | | | | | | |
|---|---|---|---|---|---|---|---|---|
| **Pin / Pout** | **15 Psig** | **18 Psig** | **22 Psig** | **25 Psig** | **29 Psig** | **36 Psig** | **44 Psig** | **58 Psig** |
| **3 Psig** | - | - | - | - | - | - | - | - |
| **4 Psig** | - | - | - | - | - | - | - | - |
| **6 Psig** | - | - | - | - | - | - | - | - |
| **7 Psig** | - | - | - | - | - | - | - | - |
| **11 Psig** | - | - | - | - | - | - | - | - |
| **15 Psig** | - | - | - | - | - | - | - | - |
| **22 Psig** | 3321 | 2649 | - | - | - | - | - | - |
| **29 Psig** | 4696 | 4588 | 4123 | 3140 | - | - | - | - |
| **44 Psig** | 6642 | 7008 | 7141 | 7022 | 6558 | 5007 | - | - |
| **58 Psig** | 8297 | 8826 | 9219 | 9420 | 9275 | 8673 | 7569 | - |
| **73 Psig** | 9952 | 10587 | 11057 | 11359 | 11359 | 11197 | 10704 | 8459 |
| **87 Psig** | 11607 | 12348 | 12896 | 13248 | 13248 | 13248 | 13109 | 11963 |
| **102 Psig** | 13262 | 14108 | 14735 | 15138 | 15138 | 15138 | 15138 | 14652 |
| **116 Psig** | 14917 | 15869 | 16574 | 17027 | 17027 | 17027 | 17027 | 16919 |
| **131 Psig** | 16572 | 17630 | 18413 | 18916 | 18916 | 18916 | 18916 | 18916 |
| **145 Psig** | 18227 | 19390 | 20252 | 20805 | 20805 | 20805 | 20805 | 20805 |

*Datos en azul corresponden a toma externa / Values in blue correspond to external impulse

d=0,05 lb/ft$^3$ AC 10

Plano CAD, no cambiar manualmente!
CAD-Drawing, do not change manually!

This design and/or document is proprietary and protected by copyright.
It may not, without our prior express consent, be copied nor transmitted
to any third party. It must be returned to us upon discharge of the order.

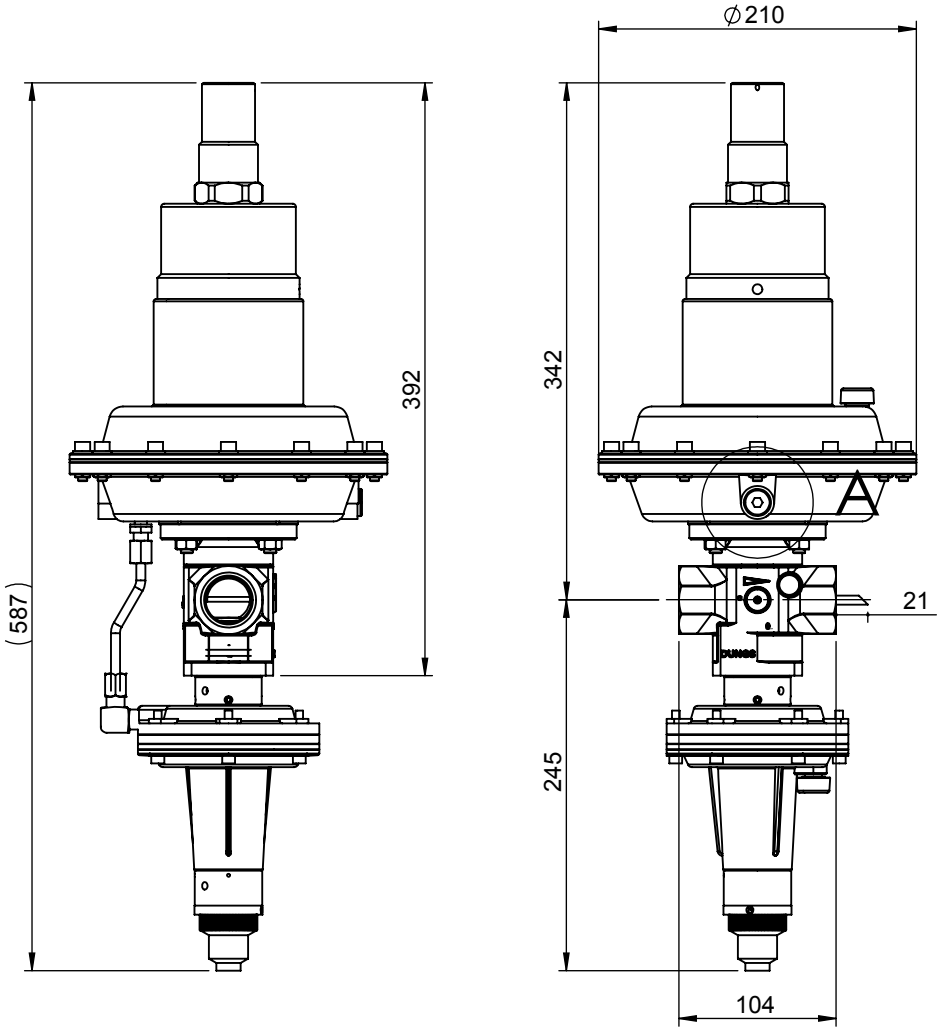


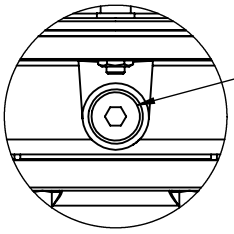

External impulse
connection on request

DETALLE A
ESCALA 2 : 5

3D

| Rev | Descripción Modificación | Fecha | Nom |
|---|---|---|---|
| | | | |
| | | | |
| | | | |
| | | | |
| | | | |
| | | | |
| | | | |
| | | | |
| | | | |
| | | | |
| | | | |
| | | | |

**Karl Dungs S.L.U.**
**Combustion Controls**
Avinguda de Can Roqueta, 15 - Pol. Can Roqueta
E-08202 - Sabadell
Barcelona - ESPAÑA

| | Fecha | Nombre | Firmado |
|---|---|---|---|
| Dibujado | 31/10/2018 | A. Rof | |
| Verificado | 31/10/2018 | J. Inglés | |
| Aprobado | 31/10/2018 | GX | |

Tolerancias según ISO 2768
TOLERANCIAS GENERALES ISO 2768-mK
(MEDIUM) TOLERANCIAS LINEALES
Roscas a 6g/6H y longitudes +1.0/-0

Rz 12.5 ( )

Eliminar rebabas y cantos vivos

Escala: 1:5

Material:

Acabado:

Tratamiento:

Peso: 10782.92 gr.

Descripción:
DIMENSIONS FRM-NOC10010UHD

| Código Pieza | Rev. | Formato | Pág. |
|---|---|---|---|
| FRM-NOC10010UHD | 0 | A4 | 1 de 1 |

Ubicación Fichero: O:\Eng Dep\Products\Assemblies\Pressure Regulators\Industrial\FRM NC\8010\3D\

Index:

Dimensiones en mm

Queda prohibida la preproducción total o parcial de este documento
y del contenido del mismo sin la autorización escrita de Karl Dungs S.L.U.
Todos los derechos reservados.

## ESPECIFICACIONES TÉCNICAS / TECHNICAL SPECIFICATION

DUNGS®
Combustion Controls

Regulador de presión con válvula de seguridad, conforme a las normas EN-334 y EN-14382 /
Pressure regulator with safety shut-off valve, in accordance with the standards EN-334 and EN-14382

| | |
|---|---|
| Presión de operación / Operating pressure | Max. 10 Bar / 1000 kPa / 145 Psig |
| Rango de presión de salida FRM / Outlet pressure range FRM | Ver tabla de Selección / See Set point Table |
| Temperatura máxima ambiental / Ambient maximum temperature | 60 ºC / 145ºF |
| Temperatura minima ambiental / Ambient minimum temperature | -20 ºC / -10 ºF |
| Fluido / Flow | Gas Natural, GLP / Natural Gas, LPG |
| Posición de montaje / Mounting Position | *Puede variar el tarado para presiones inferiores a 300 mbar / for pressures below 300 mbar setpoint can be altered |
| Tipo de Construcción / Construction Type: | DS (De resistencia diferencial) / DS (Diferential strenght) |
| Materiales / Materials — Cuerpo / Body | Hierro fundido / Cast iron EN GJS 500-7 or EN GJS 400-15 |
| Actuador / Actuator | Aluminio / Aluminium |
| Membranas / Membranes | NBR EN549 conform |
| Diametro Nominal / Nominal Diameter | Rosca 1 1/2"BSP o NPT / Thread 1 1/2" BSP or NPT |

| | BSP / SAV | BSP | NPT / SAV | NPT |
|---|---|---|---|---|
| Codigo de producto / Product's code | 279046 | 279060 | 280228 | 280240 |

Producto diseñado acorde a las normas EN-334 y EN-14382 / Product designed in accordance to EN-334 and EN-14382
Categoría III (Regulador) y IV (Válvula de seguridad) acorde a PED 2014/68/UE & CRN B51.14 pendiente
Product category III (Regulator) and IV (Safety valve) according to PED 2014/68/UE & CRN B51.14 pending

| Muelle de regulación / Regulation spring | | | | | | | | | | | |
|---|---|---|---|---|---|---|---|---|---|---|---|
| Ø hilo / wire | Rango / Range (min-Max) | | | | | | | | | Color/Color | codigo/code |
| 2,5 | 20 | 35 | (mbar) | 2 | 3,5 | (kPa) | 10 | 10 | ("WC) | rojo/red | 286372 |
| 2,8 | 30 | 55 | (mbar) | 3 | 5,5 | (kPa) | 10 | 20 | ("WC) | blanco/white | 286373 |
| 3 | 50 | 75 | (mbar) | 5 | 7,5 | (kPa) | 20 | 30 | ("WC) | amarillo/yellow | 286374 |
| 3,2 | 60 | 100 | (mbar) | 6 | 10 | (kPa) | 20 | 40 | ("WC) | azul/blue | 287676 |

| Muelle de mínima presión / Under pressure spring (UPSO) | | | | | | | | | | | |
|---|---|---|---|---|---|---|---|---|---|---|---|
| Ø hilo / wire | Rango / Range (min-Max) | | | | | | | | | Color/Color | codigo/code |
| 1,25 | 10 | 32 | (mbar) | 1 | 3,2 | (kPa) | 0 | 10 | ("WC) | Blanco/white | 270171 |
| 1,5 | 24 | 40 | (mbar) | 2,4 | 4 | (kPa) | 10 | 20 | ("WC) | Amarillo/yellow | 270175 |
| 2 | 30 | 115 | (mbar) | 3 | 11,5 | (kPa) | 10 | 50 | ("WC) | azul/blue | 270176 |

| Muelle de máxima presión / Over pressure spring (OPSO) | | | | | | | | | | | |
|---|---|---|---|---|---|---|---|---|---|---|---|
| Ø hilo / wire | Rango / Range (min-Max) | | | | | | | | | Color/Color | codigo/code |
| 2,25 | 40 | 130 | (mbar) | 4 | 13 | (kPa) | 20 | 1,9 | ("WC) | plata/silver | 270181 |
| 2,5 | 60 | 190 | (mbar) | 6 | 19 | (kPa) | 20 | 2,8 | ("WC) | verde/green | 270182 |
| 2,75 | 90 | 240 | (mbar) | 9 | 24 | (kPa) | 40 | 3,5 | ("WC) | rojo/red | 270183 |

| Orificios / Orifices | | | | | | |
|---|---|---|---|---|---|---|
| Medida/size | Ø6 | Ø8 | Ø10 | Ø12 | | |
| $P_{umax}$* (bar/psig) | 10 / 145 | 10 / 145 | 10 / 145 | 5 / 72,5 | | |

*Máxima presión de entrada / Maximum inlet pressure

DUNGS® Combustion Controls

**Tablas de caudal / Flow tables (SI units)**

| Ø8 | Pressures (Bar) vs Flow ($Nm^3/h$) | | | | | | | |
|---|---|---|---|---|---|---|---|---|
| **Pin / Pout** | **0,02** | **0,03** | **0,04** | **0,05** | **0,06** | **0,07** | **0,08** | **0,1** |
| **0,2** | 30 | 29 | 28 | 27 | 27 | 26 | 25 | 23 |
| **0,3** | 37 | 36 | 36 | 35 | 35 | 34 | 34 | 32 |
| **0,4** | 43 | 42 | 42 | 42 | 41 | 41 | 40 | 39 |
| **0,5** | 48 | 48 | 47 | 47 | 47 | 46 | 46 | 45 |
| **0,75** | 59 | 58 | 58 | 58 | 58 | 58 | 58 | 57 |
| **1** | 67 | 67 | 67 | 67 | 67 | 67 | 67 | 67 |
| **1,5** | 83 | 83 | 83 | 83 | 83 | 83 | 83 | 83 |
| **2** | 98 | 98 | 98 | 98 | 98 | 98 | 98 | 98 |
| **3** | 126 | 126 | 126 | 126 | 126 | 126 | 126 | 126 |
| **4** | 153 | 153 | 153 | 153 | 153 | 153 | 153 | 153 |
| **5** | 177 | 177 | 177 | 177 | 177 | 177 | 177 | 177 |
| **6** | 200 | 200 | 200 | 200 | 200 | 200 | 200 | 200 |
| **7** | 220 | 220 | 220 | 220 | 220 | 220 | 220 | 220 |
| **8** | 288 | 288 | 288 | 288 | 288 | 288 | 288 | 288 |
| **9** | 320 | 320 | 320 | 320 | 320 | 320 | 320 | 320 |
| **10** | 0 | 352 | 352 | 352 | 352 | 352 | 352 | 352 |

*Datos en azul corresponden a toma externa / Values in blue correspond to external impulse

d=0,83 $Kg/m^3$ AC 10

| Ø10 | Pressures (Bar) vs Flow ($Nm^3/h$) | | | | | | | |
|---|---|---|---|---|---|---|---|---|
| **Pin / Pout** | **0,02** | **0,03** | **0,04** | **0,05** | **0,06** | **0,07** | **0,08** | **0,1** |
| **0,2** | 45 | 44 | 43 | 41 | 40 | 39 | 38 | 35 |
| **0,3** | 55 | 55 | 54 | 53 | 52 | 51 | 50 | 49 |
| **0,4** | 64 | 63 | 63 | 62 | 62 | 61 | 60 | 59 |
| **0,5** | 71 | 71 | 71 | 70 | 70 | 69 | 69 | 68 |
| **0,75** | 87 | 86 | 86 | 86 | 86 | 86 | 85 | 85 |
| **1** | 99 | 99 | 99 | 98 | 98 | 98 | 98 | 98 |
| **1,5** | 119 | 119 | 119 | 119 | 119 | 119 | 119 | 119 |
| **2** | 137 | 137 | 137 | 137 | 137 | 137 | 137 | 137 |
| **3** | 169 | 169 | 169 | 169 | 169 | 169 | 169 | 169 |
| **4** | 193 | 193 | 193 | 193 | 193 | 193 | 193 | 193 |
| **5** | 274 | 274 | 274 | 274 | 274 | 274 | 274 | 274 |
| **6** | 0 | 319 | 319 | 319 | 319 | 319 | 319 | 319 |
| **7** | 0 | 0 | 365 | 365 | 365 | 365 | 365 | 365 |
| **8** | 0 | 0 | 0 | 410 | 410 | 410 | 410 | 410 |
| **9** | 0 | 0 | 0 | 0 | 456 | 456 | 456 | 456 |
| **10** | 0 | 0 | 0 | 0 | 0 | 501 | 501 | 501 |

*Datos en azul corresponden a toma externa / Values in blue correspond to external impulse

d=0,83 $Kg/m^3$ AC 10

DUNGS®
Combustion Controls

**Tablas de caudal / Flow tables (SI units)**

| Ø12 | Pressures (Bar) vs Flow ($Nm^3/h$) | | | | | | | |
|---|---|---|---|---|---|---|---|---|
| **Pin / Pout** | **0,02** | **0,03** | **0,04** | **0,05** | **0,06** | **0,07** | **0,08** | **0,1** |
| **0,2** | 55 | 54 | 53 | 51 | 50 | 48 | 46 | 43 |
| **0,3** | 68 | 68 | 67 | 66 | 65 | 64 | 62 | 60 |
| **0,4** | 79 | 79 | 78 | 77 | 76 | 76 | 75 | 73 |
| **0,5** | 88 | 88 | 87 | 87 | 86 | 86 | 85 | 84 |
| **0,75** | 107 | 107 | 107 | 106 | 106 | 106 | 105 | 105 |
| **1** | 122 | 122 | 122 | 122 | 122 | 121 | 121 | 121 |
| **1,5** | 146 | 146 | 146 | 146 | 146 | 146 | 146 | 146 |
| **2** | 169 | 169 | 169 | 169 | 169 | 169 | 169 | 169 |
| **3** | 207 | 207 | 207 | 207 | 207 | 207 | 207 | 207 |
| **4** | 296 | 296 | 296 | 296 | 296 | 296 | 296 | 296 |
| **5** | 0 | 355 | 355 | 355 | 355 | 355 | 355 | 355 |
| **6** | 0 | 0 | 414 | 414 | 414 | 414 | 414 | 414 |
| **7** | 0 | 0 | 0 | 473 | 473 | 473 | 473 | 473 |
| **8** | 0 | 0 | 0 | 0 | 532 | 532 | 532 | 532 |
| **9** | 0 | 0 | 0 | 0 | 0 | 591 | 591 | 591 |
| **10** | 0 | 0 | 0 | 0 | 0 | 0 | 650 | 650 |

*Datos en azul corresponden a toma externa / Values in blue correspond to external impulse

d=0,83 $Kg/m^3$ AC 10

| Ø14 | Pressures (Bar) vs Flow ($Nm^3/h$) | | | | | | | |
|---|---|---|---|---|---|---|---|---|
| **Pin / Pout** | **0,02** | **0,03** | **0,04** | **0,05** | **0,06** | **0,07** | **0,08** | **0,1** |
| **0,2** | 62 | 60 | 59 | 57 | 55 | 54 | 52 | 48 |
| **0,3** | 76 | 75 | 74 | 73 | 72 | 71 | 70 | 67 |
| **0,4** | 88 | 88 | 87 | 86 | 85 | 84 | 83 | 81 |
| **0,5** | 99 | 98 | 97 | 97 | 96 | 96 | 95 | 93 |
| **0,75** | 119 | 119 | 119 | 119 | 118 | 118 | 118 | 117 |
| **1** | 0 | 136 | 136 | 136 | 136 | 135 | 135 | 135 |
| **1,5** | 0 | 0 | 163 | 163 | 163 | 163 | 163 | 163 |
| **2** | 0 | 0 | 0 | 188 | 188 | 188 | 188 | 188 |
| **3** | 0 | 0 | 0 | 0 | 291 | 291 | 291 | 291 |
| **4** | 0 | 0 | 0 | 0 | 0 | 363 | 363 | 363 |
| **5** | 0 | 0 | 0 | 0 | 0 | 0 | 436 | 436 |
| **6** | 0 | 0 | 0 | 0 | 0 | 0 | 0 | 508 |
| **7** | 0 | 0 | 0 | 0 | 0 | 0 | 0 | 0 |
| **8** | 0 | 0 | 0 | 0 | 0 | 0 | 0 | 0 |
| **9** | 0 | 0 | 0 | 0 | 0 | 0 | 0 | 0 |
| **10** | 0 | 0 | 0 | 0 | 0 | 0 | 0 | 0 |

*Datos en azul corresponden a toma externa / Values in blue correspond to external impulse

d=0,83 $Kg/m^3$ AC 10

DUNGS®
Combustion Controls

**Tablas de caudal / Flow tables (Imperial units)**

| Ø8 | Pressures (Psig/"WC) vs Flow (SCFH) | | | | | | | |
|---|---|---|---|---|---|---|---|---|
| **Pin / Pout** | **8 "WC** | **12 "WC** | **16 "WC** | **20 "WC** | **24 "WC** | **28 "WC** | **32 "WC** | **40 "WC** |
| **3 Psig** | 1045 | 1020 | 994 | 967 | 939 | 909 | 877 | 808 |
| **4 Psig** | 1299 | 1282 | 1264 | 1245 | 1226 | 1205 | 1184 | 1140 |
| **6 Psig** | 1509 | 1496 | 1483 | 1469 | 1455 | 1440 | 1424 | 1392 |
| **7 Psig** | 1691 | 1681 | 1671 | 1661 | 1650 | 1639 | 1627 | 1602 |
| **11 Psig** | 2070 | 2065 | 2061 | 2056 | 2051 | 2045 | 2040 | 2027 |
| **15 Psig** | 2380 | 2380 | 2379 | 2377 | 2376 | 2374 | 2372 | 2368 |
| **22 Psig** | 2928 | 2928 | 2928 | 2928 | 2928 | 2928 | 2928 | 2928 |
| **29 Psig** | 3458 | 3458 | 3458 | 3458 | 3458 | 3458 | 3458 | 3458 |
| **44 Psig** | 4464 | 4464 | 4464 | 4464 | 4464 | 4464 | 4464 | 4464 |
| **58 Psig** | 5399 | 5399 | 5399 | 5399 | 5399 | 5399 | 5399 | 5399 |
| **73 Psig** | 6264 | 6264 | 6264 | 6264 | 6264 | 6264 | 6264 | 6264 |
| **87 Psig** | 7058 | 7058 | 7058 | 7058 | 7058 | 7058 | 7058 | 7058 |
| **102 Psig** | 7781 | 7781 | 7781 | 7781 | 7781 | 7781 | 7781 | 7781 |
| **116 Psig** | 10184 | 10184 | 10184 | 10184 | 10184 | 10184 | 10184 | 10184 |
| **131 Psig** | 11314 | 11314 | 11314 | 11314 | 11314 | 11314 | 11314 | 11314 |
| **145 Psig** | 0 | 12444 | 12444 | 12444 | 12444 | 12444 | 12444 | 12444 |

*Datos en azul corresponden a toma externa / Values in blue correspond to external impulse

d=0,05 lb/ft$^3$ AC 10

| Ø10 | Pressures (Psig/"WC) vs Flow (SCFH) | | | | | | | |
|---|---|---|---|---|---|---|---|---|
| **Pin / Pout** | **8 "WC** | **12 "WC** | **16 "WC** | **20 "WC** | **24 "WC** | **28 "WC** | **32 "WC** | **40 "WC** |
| **3 Psig** | 1577 | 1540 | 1502 | 1461 | 1418 | 1373 | 1325 | 1220 |
| **4 Psig** | 1954 | 1928 | 1901 | 1873 | 1844 | 1813 | 1782 | 1714 |
| **6 Psig** | 2261 | 2242 | 2222 | 2201 | 2180 | 2157 | 2134 | 2085 |
| **7 Psig** | 2524 | 2509 | 2494 | 2479 | 2463 | 2446 | 2428 | 2391 |
| **11 Psig** | 3059 | 3052 | 3046 | 3038 | 3031 | 3023 | 3014 | 2996 |
| **15 Psig** | 3482 | 3481 | 3479 | 3477 | 3475 | 3473 | 3470 | 3463 |
| **22 Psig** | 4193 | 4193 | 4193 | 4193 | 4193 | 4193 | 4193 | 4193 |
| **29 Psig** | 4841 | 4841 | 4841 | 4841 | 4841 | 4841 | 4841 | 4841 |
| **44 Psig** | 5951 | 5951 | 5951 | 5951 | 5951 | 5951 | 5951 | 5951 |
| **58 Psig** | 6815 | 6815 | 6815 | 6815 | 6815 | 6815 | 6815 | 6815 |
| **73 Psig** | 9661 | 9661 | 9661 | 9661 | 9661 | 9661 | 9661 | 9661 |
| **87 Psig** | 0 | 11267 | 11267 | 11267 | 11267 | 11267 | 11267 | 11267 |
| **102 Psig** | 0 | 0 | 12874 | 12874 | 12874 | 12874 | 12874 | 12874 |
| **116 Psig** | 0 | 0 | 0 | 14481 | 14481 | 14481 | 14481 | 14481 |
| **131 Psig** | 0 | 0 | 0 | 0 | 16087 | 16087 | 16087 | 16087 |
| **145 Psig** | 0 | 0 | 0 | 0 | 0 | 17694 | 17694 | 17694 |

*Datos en azul corresponden a toma externa / Values in blue correspond to external impulse

d=0,05 lb/ft$^3$ AC 10

DUNGS®
Combustion Controls

**Tablas de caudal / Flow tables (Imperial units)**

| Ø12 | Pressures (Psig/"WC) vs Flow (SCFH) | | | | | | | |
|---|---|---|---|---|---|---|---|---|
| **Pin / Pout** | **8 "WC** | **12 "WC** | **16 "WC** | **20 "WC** | **24 "WC** | **28 "WC** | **32 "WC** | **40 "WC** |
| **3 Psig** | 1952 | 1906 | 1858 | 1808 | 1755 | 1699 | 1639 | 1510 |
| **4 Psig** | 2417 | 2385 | 2352 | 2317 | 2281 | 2243 | 2204 | 2121 |
| **6 Psig** | 2796 | 2773 | 2748 | 2722 | 2696 | 2668 | 2640 | 2579 |
| **7 Psig** | 3120 | 3103 | 3084 | 3065 | 3045 | 3024 | 3003 | 2957 |
| **11 Psig** | 3779 | 3771 | 3763 | 3754 | 3745 | 3735 | 3724 | 3702 |
| **15 Psig** | 4299 | 4298 | 4296 | 4294 | 4291 | 4288 | 4284 | 4276 |
| **22 Psig** | 5169 | 5169 | 5169 | 5169 | 5169 | 5169 | 5169 | 5169 |
| **29 Psig** | 5958 | 5958 | 5958 | 5958 | 5958 | 5958 | 5958 | 5958 |
| **44 Psig** | 7298 | 7298 | 7298 | 7298 | 7298 | 7298 | 7298 | 7298 |
| **58 Psig** | 10444 | 10444 | 10444 | 10444 | 10444 | 10444 | 10444 | 10444 |
| **73 Psig** | 0 | 12527 | 12527 | 12527 | 12527 | 12527 | 12527 | 12527 |
| **87 Psig** | 0 | 0 | 14610 | 14610 | 14610 | 14610 | 14610 | 14610 |
| **102 Psig** | 0 | 0 | 0 | 16694 | 16694 | 16694 | 16694 | 16694 |
| **116 Psig** | 0 | 0 | 0 | 0 | 18777 | 18777 | 18777 | 18777 |
| **131 Psig** | 0 | 0 | 0 | 0 | 0 | 20860 | 20860 | 20860 |
| **145 Psig** | 0 | 0 | 0 | 0 | 0 | 0 | 22944 | 22944 |

*Datos en azul corresponden a toma externa / Values in blue correspond to external impulse

d=0,05 lb/ft$^3$ AC 10

| Ø14 | Pressures (Psig/"WC) vs Flow (SCFH) | | | | | | | |
|---|---|---|---|---|---|---|---|---|
| **Pin / Pout** | **8 "WC** | **12 "WC** | **16 "WC** | **20 "WC** | **24 "WC** | **28 "WC** | **32 "WC** | **40 "WC** |
| **3 Psig** | 2177 | 2126 | 2073 | 2016 | 1957 | 1895 | 1829 | 1685 |
| **4 Psig** | 2697 | 2661 | 2624 | 2585 | 2544 | 2502 | 2459 | 2366 |
| **6 Psig** | 3119 | 3093 | 3065 | 3037 | 3007 | 2976 | 2944 | 2877 |
| **7 Psig** | 3481 | 3461 | 3441 | 3419 | 3397 | 3374 | 3349 | 3298 |
| **11 Psig** | 4216 | 4207 | 4198 | 4188 | 4178 | 4167 | 4155 | 4130 |
| **15 Psig** | 0 | 4795 | 4793 | 4790 | 4787 | 4784 | 4780 | 4771 |
| **22 Psig** | 0 | 0 | 5768 | 5768 | 5768 | 5768 | 5768 | 5768 |
| **29 Psig** | 0 | 0 | 0 | 6649 | 6649 | 6649 | 6649 | 6649 |
| **44 Psig** | 0 | 0 | 0 | 0 | 10273 | 10273 | 10273 | 10273 |
| **58 Psig** | 0 | 0 | 0 | 0 | 0 | 12833 | 12833 | 12833 |
| **73 Psig** | 0 | 0 | 0 | 0 | 0 | 0 | 15393 | 15393 |
| **87 Psig** | 0 | 0 | 0 | 0 | 0 | 0 | 0 | 17953 |
| **102 Psig** | 0 | 0 | 0 | 0 | 0 | 0 | 0 | 0 |
| **116 Psig** | 0 | 0 | 0 | 0 | 0 | 0 | 0 | 0 |
| **131 Psig** | 0 | 0 | 0 | 0 | 0 | 0 | 0 | 0 |
| **145 Psig** | 0 | 0 | 0 | 0 | 0 | 0 | 0 | 0 |

*Datos en azul corresponden a toma externa / Values in blue correspond to external impulse

d=0,05 lb/ft$^3$ AC 10

Plano CAD, no cambiar manualmente!
CAD-Drawing, do not change manually!

This design and/or document is proprietary and protected by copyright.
It may not, without our prior express consent, be copied nor transmitted
to any third party. It must be returned to us upon discharge of the order.

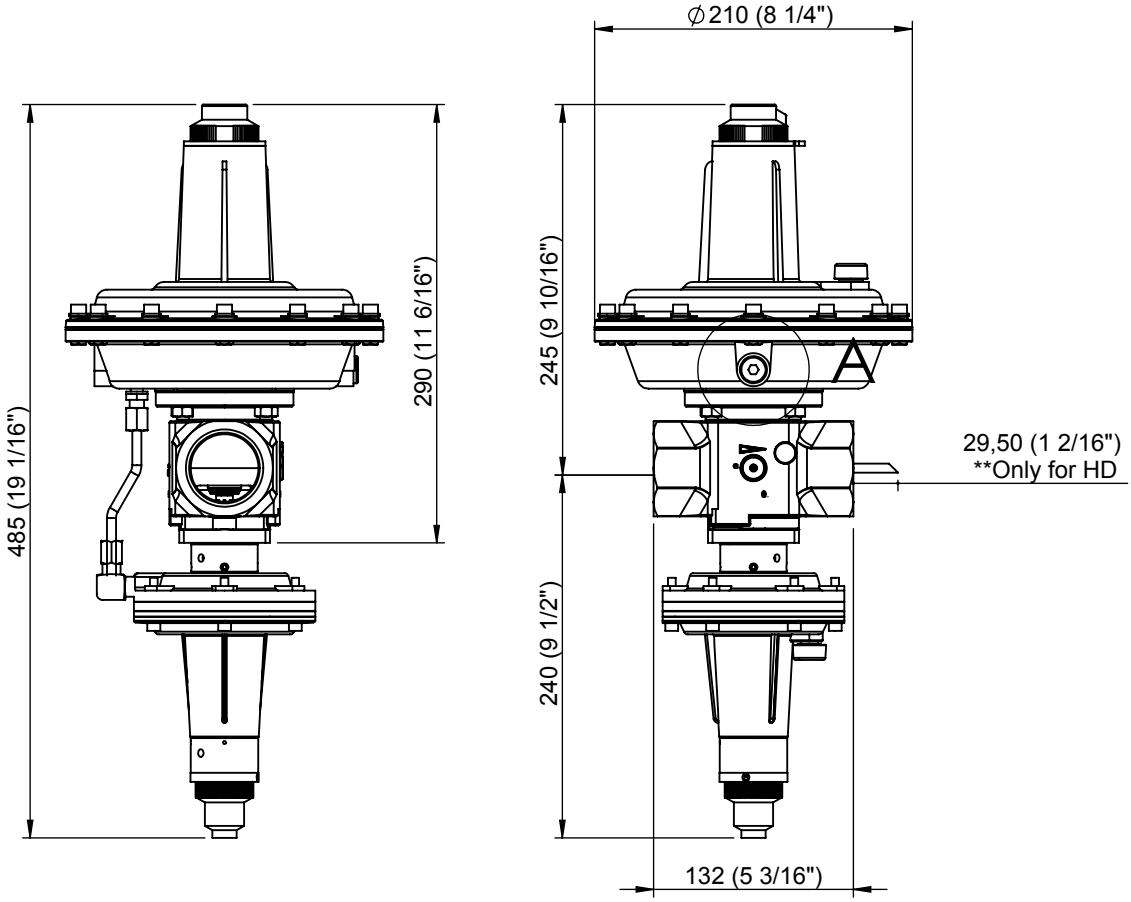


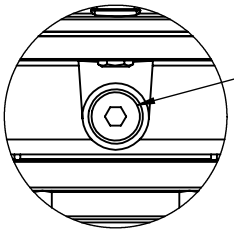

External impulse
connection on request

DETALLE A
ESCALA 2 : 5

Queda prohibida la preproducción total o parcial de este documento
y del contenido del mismo sin la autorización escrita de Karl Dungs S.L.U.
Todos los derechos reservados.

3D

| Rev | Descripción Modificación | Fecha | Nom |
|---|---|---|---|
| | | | |

**Karl Dungs S.L.U.**
**Combustion Controls**
Avinguda de Can Roqueta, 15 - Pol. Can Roqueta
E-08202 - Sabadell
Barcelona - ESPAÑA

| | Fecha | Nombre | Firmado |
|---|---|---|---|
| Dibujado | 31/10/2018 | A.Rof | |
| Verificado | 31/10/2018 | J.Inglés | |
| Aprobado | 31/10/2018 | GX | |

Tolerancias según ISO 2768
TOLERANCIAS GENERALES ISO 2768-mK
(MEDIUM) TOLERANCIAS LINEALES
Roscas a 6g/6H y longitudes +1.0/-0

Rz 12.5 ( )

Eliminar rebabas y cantos vivos

Escala: 1:5

Material:

Acabado:

Tratamiento:

Peso: 8139.00 gr.

Descripción:
DIMENSIONS FRM-NOC10015ND/MD/HD

| Código Pieza | Rev. | Formato | Pág. |
|---|---|---|---|
| FRM-NOC10015ND_MD_HD | 0 | A4 | 1 de 1 |

Dimensiones en mm (inch)

## ESPECIFICACIONES TÉCNICAS / TECHNICAL SPECIFICATION

DUNGS®
Combustion Controls

Regulador de presión con válvula de seguridad, conforme a las normas EN-334 y EN-14382 /
Pressure regulator with safety shut-off valve, in accordance with the standards EN-334 and EN-14382

| | |
|---|---|
| Presión de operación / Operating pressure | Max. 10 Bar / 1000 kPa / 145 Psig |
| Rango de presión de salida FRM / Outlet pressure range FRM | Ver tabla de Selección / See Set point Table |
| Temperatura máxima ambiental / Ambient maximum temperature | 60 ºC / 145ºF |
| Temperatura minima ambiental / Ambient minimum temperature | -20 ºC / -10 ºF |
| Fluido / Flow | Gas Natural, GLP / Natural Gas, LPG |
| Posición de montaje / Mounting Position | 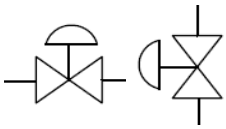 *Puede variar el tarado para presiones inferiores a 300 mbar / for pressures below 300 mbar setpoint can be altered |
| Tipo de Construcción / Construction Type: | DS (De resistencia diferencial) / DS (Diferential strenght) |
| Materiales / Materials — Cuerpo / Body | Hierro fundido / Cast iron EN GJS 500-7 or EN GJS 400-15 |
| Actuador / Actuator | Aluminio / Aluminium |
| Membranas / Membranes | NBR EN549 conform |
| Diametro Nominal / Nominal Diameter | Rosca 1 1/2" BSP o NPT / Thread 1 1/2" BSP or NPT |

| | BSP / SAV | BSP | NPT / SAV | NPT |
|---|---|---|---|---|
| Codigo de producto / Product's code | 279047 | 279061 | 280229 | 280241 |

Producto diseñado acorde a las normas EN-334 y EN-14382 / Product designed in accordance to EN-334 and EN-14382
Categoría III (Regulador) y IV (Válvula de seguridad) acorde a PED 2014/68/UE & CRN B51.14 pendiente
Product category III (Regulator) and IV (Safety valve) according to PED 2014/68/UE & CRN B51.14 pending

| Muelle de regulación / Regulation spring | | | | | | | | | | | |
|---|---|---|---|---|---|---|---|---|---|---|---|
| Ø hilo / wire | Rango / Range (min-Max) | | | | | | | | | Color/Color | codigo/code |
| 3,2 | 80 | 150 | (mbar) | 8 | 15 | (kPa) | 30 | 2,2 | ("WC) | blanco/white | 287676 |
| 3,5 | 100 | 200 | (mbar) | 10 | 20 | (kPa) | 40 | 2,9 | ("WC) | amarillo/yellow | 287279 |
| 3,7 | 130 | 250 | (mbar) | 13 | 25 | (kPa) | 1,9 | 3,6 | (psig) | azul/blue | 287280 |
| 4 | 180 | 350 | (mbar) | 18 | 35 | (kPa) | 2,6 | 5,1 | (psig) | negro/black | 287284 |
| 4,3 | 200 | 400 | (mbar) | 20 | 40 | (kPa) | 2,9 | 5,8 | (psig) | lila/purple | 287287 |

| Muelle de mínima presión / Under pressure spring (UPSO) | | | | | | | | | | | |
|---|---|---|---|---|---|---|---|---|---|---|---|
| Ø hilo / wire | Rango / Range (min-Max) | | | | | | | | | Color/Color | codigo/code |
| 2 | 35 | 110 | (mbar) | 3,5 | 11 | (kPa) | 10 | 40 | ("WC) | lila/purple | 270176 |
| 2,3 | 50 | 250 | (mbar) | 5 | 25 | (kPa) | 20 | 3,6 | ("WC) | naranja/orange | 270177 |
| 2,5 | 80 | 400 | (mbar) | 8 | 40 | (kPa) | 30 | 5,8 | ("WC) | plata/silver | 270178 |

| Muelle de máxima presión / Over pressure spring (OPSO) | | | | | | | | | | | |
|---|---|---|---|---|---|---|---|---|---|---|---|
| Ø hilo / wire | Rango / Range (min-Max) | | | | | | | | | Color/Color | codigo/code |
| 2,5 | 180 | 290 | (mbar) | 18 | 29 | (kPa) | 2,6 | 4,2 | (psig) | azul/blue | 270182 |
| 2,75 | 230 | 370 | (mbar) | 23 | 37 | (kPa) | 3,3 | 5,4 | (psig) | negro/black | 270183 |
| 3,25 | 300 | 500 | (mbar) | 30 | 50 | (kPa) | 4,4 | 7,3 | (psig) | lila/purple | 270184 |
| 3,5 | 400 | 800 | (mbar) | 40 | 80 | (kPa) | 5,8 | 11,6 | (psig) | rosa/pink | 270185 |

| Orificios / Orifices | | | | | | |
|---|---|---|---|---|---|---|
| Medida/size | Ø6 | Ø8 | Ø10 | Ø12 | | |
| $P_{umax}$* (bar/psig) | 10 / 145 | 10 / 145 | 10 / 145 | 10 / 145 | | |

*Máxima presión de entrada / Maximum inlet pressure

Regulador de gas para media presión / Gas regulator for medium pressure
**FRM-NOC 10015 MD / SAV MD**

DUNGS®
Combustion Controls

**Tablas de caudal / Flow tables (SI units)**

| Ø8 | Pressures (Bar) vs Flow ($Nm^3/h$) | | | | | | | |
|---|---|---|---|---|---|---|---|---|
| **Pin / Pout** | **0,08** | **0,1** | **0,15** | **0,2** | **0,25** | **0,3** | **0,35** | **0,4** |
| **0,2** | 22 | 21 | 15 | - | - | - | - | - |
| **0,3** | 30 | 29 | 26 | 22 | 16 | - | - | - |
| **0,4** | 37 | 36 | 33 | 31 | 27 | 22 | 16 | - |
| **0,5** | 42 | 41 | 40 | 37 | 35 | 32 | 28 | 23 |
| **0,75** | 53 | 53 | 52 | 51 | 49 | 48 | 46 | 44 |
| **1** | 62 | 62 | 62 | 61 | 60 | 59 | 58 | 57 |
| **1,5** | 78 | 78 | 78 | 78 | 78 | 78 | 78 | 77 |
| **2** | 93 | 93 | 93 | 93 | 93 | 93 | 93 | 93 |
| **3** | 124 | 124 | 124 | 124 | 124 | 124 | 124 | 124 |
| **4** | 155 | 155 | 155 | 155 | 155 | 155 | 155 | 155 |
| **5** | 186 | 186 | 186 | 186 | 186 | 186 | 186 | 186 |
| **6** | 217 | 217 | 217 | 217 | 217 | 217 | 217 | 217 |
| **7** | 248 | 248 | 248 | 248 | 248 | 248 | 248 | 248 |
| **8** | 279 | 279 | 279 | 279 | 279 | 279 | 279 | 279 |
| **9** | 310 | 310 | 310 | 310 | 310 | 310 | 310 | 310 |
| **10** | 341 | 341 | 341 | 341 | 341 | 341 | 341 | 341 |

*Datos en azul corresponden a toma externa / Values in blue correspond to external impulse

d=0,83 $Kg/m^3$ AC 10

| Ø10 | Pressures (Bar) vs Flow ($Nm^3/h$) | | | | | | | |
|---|---|---|---|---|---|---|---|---|
| **Pin / Pout** | **0,08** | **0,1** | **0,15** | **0,2** | **0,25** | **0,3** | **0,35** | **0,4** |
| **0,2** | 34 | 31 | 22 | - | - | - | - | - |
| **0,3** | 46 | 44 | 39 | 32 | 23 | - | - | - |
| **0,4** | 55 | 54 | 50 | 46 | 40 | 34 | 24 | - |
| **0,5** | 63 | 62 | 59 | 56 | 52 | 48 | 42 | 35 |
| **0,75** | 80 | 79 | 78 | 76 | 74 | 71 | 69 | 65 |
| **1** | 93 | 93 | 92 | 92 | 91 | 89 | 88 | 86 |
| **1,5** | 117 | 117 | 117 | 117 | 117 | 117 | 116 | 116 |
| **2** | 140 | 140 | 140 | 140 | 140 | 140 | 140 | 140 |
| **3** | 187 | 187 | 187 | 187 | 187 | 187 | 187 | 187 |
| **4** | 233 | 233 | 233 | 233 | 233 | 233 | 233 | 233 |
| **5** | 280 | 280 | 280 | 280 | 280 | 280 | 280 | 280 |
| **6** | 326 | 326 | 326 | 326 | 326 | 326 | 326 | 326 |
| **7** | 373 | 373 | 373 | 373 | 373 | 373 | 373 | 373 |
| **8** | 419 | 419 | 419 | 419 | 419 | 419 | 419 | 419 |
| **9** | 466 | 466 | 466 | 466 | 466 | 466 | 466 | 466 |
| **10** | 512 | 512 | 512 | 512 | 512 | 512 | 512 | 512 |

*Datos en azul corresponden a toma externa / Values in blue correspond to external impulse

d=0,83 $Kg/m^3$ AC 10

DUNGS®
Combustion Controls

**Tablas de caudal / Flow tables (SI units)**

| Ø12 | Pressures (Bar) vs Flow ($Nm^3/h$) | | | | | | | |
|---|---|---|---|---|---|---|---|---|
| **Pin / Pout** | **0,08** | **0,1** | **0,15** | **0,2** | **0,25** | **0,3** | **0,35** | **0,4** |
| **0,2** | 43 | 40 | 29 | 0 | - | - | - | - |
| **0,3** | 59 | 57 | 50 | 42 | 30 | 0 | - | - |
| **0,4** | 71 | 69 | 65 | 59 | 52 | 43 | 31 | 0 |
| **0,5** | 81 | 80 | 77 | 72 | 67 | 61 | 54 | 45 |
| **0,75** | 103 | 102 | 100 | 98 | 95 | 92 | 89 | 84 |
| **1** | 120 | 120 | 119 | 118 | 117 | 115 | 113 | 110 |
| **1,5** | 151 | 151 | 151 | 151 | 151 | 151 | 150 | 150 |
| **2** | 181 | 181 | 181 | 181 | 181 | 181 | 181 | 181 |
| **3** | 241 | 241 | 241 | 241 | 241 | 241 | 241 | 241 |
| **4** | 301 | 301 | 301 | 301 | 301 | 301 | 301 | 301 |
| **5** | 361 | 361 | 361 | 361 | 361 | 361 | 361 | 361 |
| **6** | 421 | 421 | 421 | 421 | 421 | 421 | 421 | 421 |
| **7** | 481 | 481 | 481 | 481 | 481 | 481 | 481 | 481 |
| **8** | 541 | 541 | 541 | 541 | 541 | 541 | 541 | 541 |
| **9** | 601 | 601 | 601 | 601 | 601 | 601 | 601 | 601 |
| **10** | 661 | 661 | 661 | 661 | 661 | 661 | 661 | 661 |

*Datos en azul corresponden a toma externa / Values in blue correspond to external impulse

d=0,83 $Kg/m^3$ AC 10

| Ø14 | Pressures (Bar) vs Flow ($Nm^3/h$) | | | | | | | |
|---|---|---|---|---|---|---|---|---|
| **Pin / Pout** | **0,08** | **0,1** | **0,15** | **0,2** | **0,25** | **0,3** | **0,35** | **0,4** |
| **0,2** | 54 | 50 | 36 | - | - | - | - | - |
| **0,3** | 73 | 70 | 62 | 52 | 37 | - | - | - |
| **0,4** | 88 | 86 | 80 | 73 | 65 | 54 | 39 | - |
| **0,5** | 100 | 99 | 94 | 89 | 83 | 76 | 67 | 56 |
| **0,75** | 126 | 125 | 123 | 120 | 117 | 113 | 109 | 103 |
| **1** | 146 | 146 | 145 | 144 | 142 | 140 | 137 | 134 |
| **1,5** | 181 | 181 | 181 | 181 | 181 | 181 | 180 | 180 |
| **2** | 214 | 214 | 214 | 214 | 214 | 214 | 214 | 214 |
| **3** | 277 | 277 | 277 | 277 | 277 | 277 | 277 | 277 |
| **4** | 336 | 336 | 336 | 336 | 336 | 336 | 336 | 336 |
| **5** | 391 | 391 | 391 | 391 | 391 | 391 | 391 | 391 |
| **6** | 442 | 442 | 442 | 442 | 442 | 442 | 442 | 442 |
| **7** | 489 | 489 | 489 | 489 | 489 | 489 | 489 | 489 |
| **8** | 532 | 532 | 532 | 532 | 532 | 532 | 532 | 532 |
| **9** | 0 | 691 | 691 | 691 | 691 | 691 | 691 | 691 |
| **10** | 0 | 0 | 760 | 760 | 760 | 760 | 760 | 760 |

*Datos en azul corresponden a toma externa / Values in blue correspond to external impulse

d=0,83 $Kg/m^3$ AC 10

DUNGS®
Combustion Controls

**Tablas de caudal / Flow tables (Imperial units)**

| Ø8 | Pressures (Psig/"WC) vs Flow (SCFH) | | | | | | | |
|---|---|---|---|---|---|---|---|---|
| **Pin / Pout** | **32 "WC** | **40 "WC** | **60 "WC** | **80 "WC** | **100 "WC** | **121 "WC** | **141 "WC** | **161 "WC** |
| **3 Psig** | 793 | 730 | 528 | - | - | - | - | - |
| **4 Psig** | 1074 | 1033 | 914 | 762 | 550 | - | - | - |
| **6 Psig** | 1295 | 1265 | 1180 | 1078 | 953 | 793 | 572 | - |
| **7 Psig** | 1483 | 1461 | 1397 | 1321 | 1230 | 1122 | 990 | 823 |
| **11 Psig** | 1873 | 1862 | 1829 | 1788 | 1740 | 1683 | 1617 | 1540 |
| **15 Psig** | 2195 | 2191 | 2177 | 2157 | 2131 | 2099 | 2061 | 2016 |
| **22 Psig** | 2751 | 2751 | 2751 | 2751 | 2751 | 2748 | 2741 | 2729 |
| **29 Psig** | 3298 | 3298 | 3298 | 3298 | 3298 | 3298 | 3298 | 3298 |
| **44 Psig** | 4393 | 4393 | 4393 | 4393 | 4393 | 4393 | 4393 | 4393 |
| **58 Psig** | 5487 | 5487 | 5487 | 5487 | 5487 | 5487 | 5487 | 5487 |
| **73 Psig** | 6582 | 6582 | 6582 | 6582 | 6582 | 6582 | 6582 | 6582 |
| **87 Psig** | 7677 | 7677 | 7677 | 7677 | 7677 | 7677 | 7677 | 7677 |
| **102 Psig** | 8771 | 8771 | 8771 | 8771 | 8771 | 8771 | 8771 | 8771 |
| **116 Psig** | 9866 | 9866 | 9866 | 9866 | 9866 | 9866 | 9866 | 9866 |
| **131 Psig** | 10961 | 10961 | 10961 | 10961 | 10961 | 10961 | 10961 | 10961 |
| **145 Psig** | 12055 | 12055 | 12055 | 12055 | 12055 | 12055 | 12055 | 12055 |

*Datos en azul corresponden a toma externa / Values in blue correspond to external impulse

d=0,05 lb/ft$^3$ AC 10

| Ø10 | Pressures (Psig/"WC) vs Flow (SCFH) | | | | | | | |
|---|---|---|---|---|---|---|---|---|
| **Pin / Pout** | **32 "WC** | **40 "WC** | **60 "WC** | **80 "WC** | **100 "WC** | **121 "WC** | **141 "WC** | **161 "WC** |
| **3 Psig** | 1189 | 1096 | 792 | - | - | - | - | - |
| **4 Psig** | 1610 | 1549 | 1372 | 1144 | 825 | - | - | - |
| **6 Psig** | 1942 | 1898 | 1771 | 1617 | 1429 | 1190 | 857 | - |
| **7 Psig** | 2225 | 2191 | 2095 | 1981 | 1845 | 1683 | 1485 | 1234 |
| **11 Psig** | 2810 | 2793 | 2743 | 2682 | 2610 | 2524 | 2425 | 2309 |
| **15 Psig** | 3293 | 3287 | 3265 | 3235 | 3196 | 3148 | 3091 | 3024 |
| **22 Psig** | 4126 | 4126 | 4126 | 4126 | 4126 | 4122 | 4111 | 4094 |
| **29 Psig** | 4947 | 4947 | 4947 | 4947 | 4947 | 4947 | 4947 | 4947 |
| **44 Psig** | 6589 | 6589 | 6589 | 6589 | 6589 | 6589 | 6589 | 6589 |
| **58 Psig** | 8231 | 8231 | 8231 | 8231 | 8231 | 8231 | 8231 | 8231 |
| **73 Psig** | 9873 | 9873 | 9873 | 9873 | 9873 | 9873 | 9873 | 9873 |
| **87 Psig** | 11515 | 11515 | 11515 | 11515 | 11515 | 11515 | 11515 | 11515 |
| **102 Psig** | 13157 | 13157 | 13157 | 13157 | 13157 | 13157 | 13157 | 13157 |
| **116 Psig** | 14799 | 14799 | 14799 | 14799 | 14799 | 14799 | 14799 | 14799 |
| **131 Psig** | 16441 | 16441 | 16441 | 16441 | 16441 | 16441 | 16441 | 16441 |
| **145 Psig** | 18083 | 18083 | 18083 | 18083 | 18083 | 18083 | 18083 | 18083 |

*Datos en azul corresponden a toma externa / Values in blue correspond to external impulse

d=0,05 lb/ft$^3$ AC 10

DUNGS®
Combustion Controls

**Tablas de caudal / Flow tables (Imperial units)**

| Ø12 | Pressures (Psig/"WC) vs Flow (SCFH) | | | | | | | |
|---|---|---|---|---|---|---|---|---|
| **Pin / Pout** | **32 "WC** | **40 "WC** | **60 "WC** | **80 "WC** | **100 "WC** | **121 "WC** | **141 "WC** | **161 "WC** |
| **3 Psig** | 1535 | 1414 | 1022 | 0 | - | - | - | - |
| **4 Psig** | 2078 | 1999 | 1770 | 1476 | 1065 | 0 | - | - |
| **6 Psig** | 2506 | 2448 | 2285 | 2087 | 1844 | 1535 | 1106 | 0 |
| **7 Psig** | 2871 | 2827 | 2703 | 2556 | 2381 | 2171 | 1916 | 1593 |
| **11 Psig** | 3626 | 3604 | 3540 | 3461 | 3367 | 3257 | 3129 | 2980 |
| **15 Psig** | 4249 | 4241 | 4213 | 4174 | 4124 | 4062 | 3988 | 3902 |
| **22 Psig** | 5324 | 5324 | 5324 | 5324 | 5324 | 5319 | 5305 | 5283 |
| **29 Psig** | 6383 | 6383 | 6383 | 6383 | 6383 | 6383 | 6383 | 6383 |
| **44 Psig** | 8502 | 8502 | 8502 | 8502 | 8502 | 8502 | 8502 | 8502 |
| **58 Psig** | 10621 | 10621 | 10621 | 10621 | 10621 | 10621 | 10621 | 10621 |
| **73 Psig** | 12739 | 12739 | 12739 | 12739 | 12739 | 12739 | 12739 | 12739 |
| **87 Psig** | 14858 | 14858 | 14858 | 14858 | 14858 | 14858 | 14858 | 14858 |
| **102 Psig** | 16977 | 16977 | 16977 | 16977 | 16977 | 16977 | 16977 | 16977 |
| **116 Psig** | 19095 | 19095 | 19095 | 19095 | 19095 | 19095 | 19095 | 19095 |
| **131 Psig** | 21214 | 21214 | 21214 | 21214 | 21214 | 21214 | 21214 | 21214 |
| **145 Psig** | 23333 | 23333 | 23333 | 23333 | 23333 | 23333 | 23333 | 23333 |

*Datos en azul corresponden a toma externa / Values in blue correspond to external impulse

d=0,05 lb/ft$^3$ AC 10

| Ø14 | Pressures (Psig/"WC) vs Flow (SCFH) | | | | | | | |
|---|---|---|---|---|---|---|---|---|
| **Pin / Pout** | **32 "WC** | **40 "WC** | **60 "WC** | **80 "WC** | **100 "WC** | **121 "WC** | **141 "WC** | **161 "WC** |
| **3 Psig** | 1908 | 1758 | 1270 | - | - | - | - | - |
| **4 Psig** | 2577 | 2479 | 2195 | 1830 | 1320 | - | - | - |
| **6 Psig** | 3099 | 3028 | 2826 | 2581 | 2281 | 1899 | 1368 | - |
| **7 Psig** | 3541 | 3487 | 3334 | 3153 | 2937 | 2678 | 2363 | 1964 |
| **11 Psig** | 4442 | 4415 | 4336 | 4240 | 4125 | 3990 | 3833 | 3650 |
| **15 Psig** | 5170 | 5160 | 5126 | 5078 | 5018 | 4942 | 4852 | 4747 |
| **22 Psig** | 6389 | 6389 | 6389 | 6389 | 6389 | 6383 | 6366 | 6339 |
| **29 Psig** | 7554 | 7554 | 7554 | 7554 | 7554 | 7554 | 7554 | 7554 |
| **44 Psig** | 9777 | 9777 | 9777 | 9777 | 9777 | 9777 | 9777 | 9777 |
| **58 Psig** | 11860 | 11860 | 11860 | 11860 | 11860 | 11860 | 11860 | 11860 |
| **73 Psig** | 13801 | 13801 | 13801 | 13801 | 13801 | 13801 | 13801 | 13801 |
| **87 Psig** | 15601 | 15601 | 15601 | 15601 | 15601 | 15601 | 15601 | 15601 |
| **102 Psig** | 17260 | 17260 | 17260 | 17260 | 17260 | 17260 | 17260 | 17260 |
| **116 Psig** | 18777 | 18777 | 18777 | 18777 | 18777 | 18777 | 18777 | 18777 |
| **131 Psig** | 0 | 24396 | 24396 | 24396 | 24396 | 24396 | 24396 | 24396 |
| **145 Psig** | 0 | 0 | 26833 | 26833 | 26833 | 26833 | 26833 | 26833 |

*Datos en azul corresponden a toma externa / Values in blue correspond to external impulse

d=0,05 lb/ft$^3$ AC 10

Plano CAD, no cambiar manualmente!
CAD-Drawing, do not change manually!

This design and/or document is proprietary and protected by copyright.
It may not, without our prior express consent, be copied nor transmitted
to any third party. It must be returned to us upon discharge of the order.

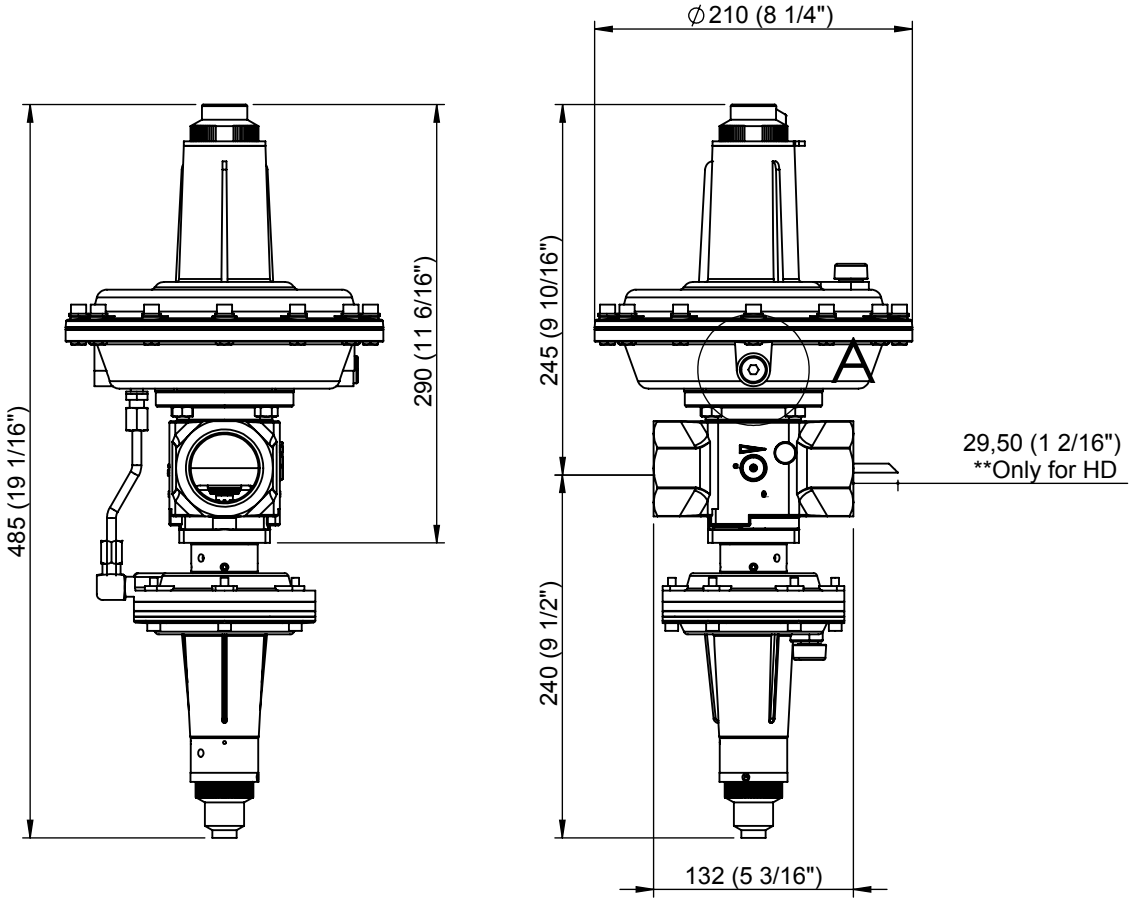


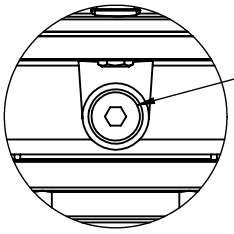

External impulse
connection on request

DETALLE A
ESCALA 2 : 5

Queda prohibida la preproducción total o parcial de este documento
y del contenido del mismo sin la autorización escrita de Karl Dungs S.L.U.
Todos los derechos reservados.

3D

| Rev | Descripción Modificación | Fecha | Nom |
|---|---|---|---|
| | | | |

**Karl Dungs S.L.U.**
**Combustion Controls**
Avinguda de Can Roqueta, 15 - Pol. Can Roqueta
E-08202 - Sabadell
Barcelona - ESPAÑA

| | Fecha | Nombre | Firmado |
|---|---|---|---|
| Dibujado | 31/10/2018 | A.Rof | |
| Verificado | 31/10/2018 | J.Inglés | |
| Aprobado | 31/10/2018 | GX | |

Tolerancias según ISO 2768
TOLERANCIAS GENERALES ISO 2768-mK
(MEDIUM) TOLERANCIAS LINEALES
Roscas a 6g/6H y longitudes +1.0/-0

Rz 12.5 ( )

Eliminar rebabas y cantos vivos

Escala: 1:5

Material:

Acabado:

Tratamiento:

Peso: 8139.00 gr.

Descripción:
DIMENSIONS FRM-NOC10015ND/MD/HD

| Código Pieza | Rev. | Formato | Pág. |
|---|---|---|---|
| FRM-NOC10015ND_MD_HD | 0 | A4 | 1 de 1 |

Dimensiones en mm (inch)

## ESPECIFICACIONES TÉCNICAS / TECHNICAL SPECIFICATION

DUNGS®
Combustion Controls

Regulador de presión con válvula de seguridad, conforme a las normas EN-334 y EN-14382 /
Pressure regulator with safety shut-off valve, in accordance with the standards EN-334 and EN-14382

| | |
|---|---|
| Presión de operación / Operating pressure | Max. 10 Bar / 1000 kPa / 145 Psig |
| Rango de presión de salida FRM / Outlet pressure range FRM | Ver tabla de Selección / See Set point Table |
| Temperatura máxima ambiental / Ambient maximum temperature | 60 ºC / 145ºF |
| Temperatura minima ambiental / Ambient minimum temperature | -20 ºC / -10 ºF |
| Fluido / Flow | Gas Natural, GLP / Natural Gas, LPG |
| Posición de montaje / Mounting Position | 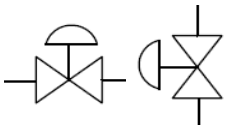 *Puede variar el tarado para presiones inferiores a 300 mbar / for pressures below 300 mbar setpoint can be altered |
| Tipo de Construcción / Construction Type: | DS (De resistencia diferencial) / DS (Diferential strenght) |
| Materiales / Materials — Cuerpo / Body | Hierro fundido / Cast iron EN GJS 500-7 or EN GJS 400-15 |
| Actuador / Actuator | Aluminio / Aluminium |
| Membranas / Membranes | NBR EN549 conform |
| Diametro Nominal / Nominal Diameter | Rosca 1" 1/2"BSP o NPT / Thread 1" BSP or NPT |

| | BSP / SAV | BSP | NPT / SAV | NPT |
|---|---|---|---|---|
| Codigo de producto / Product's code | 279048 | 279062 | 280230 | 280242 |

Producto diseñado acorde a las normas EN-334 y EN-14382 / Product designed in accordance to EN-334 and EN-14382
Categoría III (Regulador) y IV (Válvula de seguridad) acorde a PED 2014/68/UE & CRN B51.14 pendiente
Product category III (Regulator) and IV (Safety valve) according to PED 2014/68/UE & CRN B51.14 pending

| Muelle de regulación / Regulation spring | | | | | | | | | | | |
|---|---|---|---|---|---|---|---|---|---|---|---|
| Ø hilo / wire | Rango / Range (min-Max) | | | | | | | | | Color/Color | codigo/code |
| 4,5 | 300 | 500 | (mbar) | 30 | 50 | (kPa) | 4,4 | 7,3 | (psig) | blanco/white | 286355 |
| 5 | 450 | 700 | (mbar) | 45 | 70 | (kPa) | 6,5 | 10,2 | (psig) | amarillo/yellow | 286356 |
| 5,5 | 550 | 900 | (mbar) | 55 | 90 | (kPa) | 8 | 13,1 | (psig) | azul/blue | 286357 |
| 6 | 650 | 1150 | (mbar) | 65 | 115 | (kPa) | 9,4 | 16,7 | (psig) | negro/black | 286358 |
| 6,5 | 1000 | 1500 | (mbar) | 100 | 150 | (kPa) | 14,5 | 21,8 | (psig) | lila/purple | 286359 |

| Muelle de mínima presión / Under pressure spring (UPSO) | | | | | | | | | | | |
|---|---|---|---|---|---|---|---|---|---|---|---|
| Ø hilo / wire | Rango / Range (min-Max) | | | | | | | | | Color/Color | codigo/code |
| 2,5 | 150 | 500 | (mbar) | 15 | 50 | (kPa) | 2,2 | 7,3 | (psig) | lila/purple | 270178 |
| 2,8 | 300 | 1000 | (mbar) | 30 | 100 | (kPa) | 4,4 | 14,5 | (psig) | naranja/orange | 270179 |
| 3 | 800 | 1400 | (mbar) | 80 | 140 | (kPa) | 11,6 | 20,3 | (psig) | plata/silver | 270180 |

| Muelle de máxima presión / Over pressure spring (OPSO) | | | | | | | | | | | |
|---|---|---|---|---|---|---|---|---|---|---|---|
| Ø hilo / wire | Rango / Range (min-Max) | | | | | | | | | Color/Color | codigo/code |
| 3,5 | 500 | 1000 | (mbar) | 50 | 100 | (kPa) | 7,3 | 14,5 | (psig) | azul/blue | 270185 |
| 3,75 | 700 | 1300 | (mbar) | 70 | 130 | (kPa) | 10,2 | 18,9 | (psig) | negro/black | 270186 |
| 4 | 1000 | 1800 | (mbar) | 100 | 180 | (kPa) | 14,5 | 26,1 | (psig) | lila/purple | 270187 |
| 4,5 | 1300 | 2500 | (mbar) | 130 | 250 | (kPa) | 18,9 | 36,3 | (psig) | naranja/orange | 270188 |
| 4,8 | 1800 | 3500 | (mbar) | 180 | 350 | (kPa) | 26,1 | 50,8 | (psig) | rosa/pink | 270189 |

| Orificios / Orifices | | | | | | | | | | |
|---|---|---|---|---|---|---|---|---|---|---|
| Medida/size | Ø6 | | Ø8 | | Ø10 | | Ø12 | | | |
| $P_{umax}$* (bar/psig) | 10 | 145 | 10 | 145 | 10 | 145 | 10 | 145 | | |

*Máxima presión de entrada / Maximum inlet pressure

Regulador de gas para media presión / Gas regulator for medium pressure

**FRM-NOC 10015 HD / SAV HD**

DUNGS® Combustion Controls

**Tablas de caudal / Flow tables (SI units)**

| Ø8 | Pressures (Bar) vs Flow ($Nm^3/h$) | | | | | | | |
|---|---|---|---|---|---|---|---|---|
| **Pin / Pout** | **0,3** | **0,4** | **0,5** | **0,7** | **0,9** | **1,1** | **1,3** | **1,5** |
| **0,2** | - | - | - | - | - | - | - | - |
| **0,3** | - | - | - | - | - | - | - | - |
| **0,4** | 21 | - | - | - | - | - | - | - |
| **0,5** | 30 | 22 | - | - | - | - | - | - |
| **0,75** | 45 | 41 | 36 | 17 | - | - | - | - |
| **1** | 56 | 53 | 50 | 42 | 25 | - | - | - |
| **1,5** | 73 | 72 | 71 | 68 | 62 | 53 | 39 | - |
| **2** | 87 | 87 | 87 | 87 | 84 | 80 | 74 | 65 |
| **3** | 116 | 116 | 116 | 116 | 116 | 116 | 115 | 113 |
| **4** | 145 | 145 | 145 | 145 | 145 | 145 | 145 | 145 |
| **5** | 174 | 174 | 174 | 174 | 174 | 174 | 174 | 174 |
| **6** | 203 | 203 | 203 | 203 | 203 | 203 | 203 | 203 |
| **7** | 232 | 232 | 232 | 232 | 232 | 232 | 232 | 232 |
| **8** | 261 | 261 | 261 | 261 | 261 | 261 | 261 | 261 |
| **9** | 290 | 290 | 290 | 290 | 290 | 290 | 290 | 290 |
| **10** | 319 | 319 | 319 | 319 | 319 | 319 | 319 | 319 |

*Datos en azul corresponden a toma externa / Values in blue correspond to external impulse

d=0,83 $Kg/m^3$ AC 10

| Ø10 | Pressures (Bar) vs Flow ($Nm^3/h$) | | | | | | | |
|---|---|---|---|---|---|---|---|---|
| **Pin / Pout** | **0,3** | **0,4** | **0,5** | **0,7** | **0,9** | **1,1** | **1,3** | **1,5** |
| **0,2** | - | - | - | - | - | - | - | - |
| **0,3** | - | - | - | - | - | - | - | - |
| **0,4** | 31 | - | - | - | - | - | - | - |
| **0,5** | 44 | 32 | - | - | - | - | - | - |
| **0,75** | 66 | 60 | 53 | 25 | - | - | - | - |
| **1** | 82 | 79 | 75 | 62 | 38 | - | - | - |
| **1,5** | 108 | 107 | 106 | 101 | 92 | 79 | 58 | - |
| **2** | 130 | 130 | 130 | 128 | 125 | 119 | 109 | 96 |
| **3** | 173 | 173 | 173 | 173 | 173 | 172 | 170 | 166 |
| **4** | 216 | 216 | 216 | 216 | 216 | 216 | 215 | 214 |
| **5** | 259 | 259 | 259 | 259 | 259 | 259 | 258 | 257 |
| **6** | 302 | 302 | 302 | 302 | 302 | 302 | 301 | 300 |
| **7** | 345 | 345 | 345 | 345 | 345 | 345 | 343 | 342 |
| **8** | 388 | 388 | 388 | 388 | 388 | 388 | 386 | 385 |
| **9** | 431 | 431 | 431 | 431 | 431 | 431 | 429 | 428 |
| **10** | 474 | 474 | 474 | 474 | 474 | 474 | 472 | 471 |

*Datos en azul corresponden a toma externa / Values in blue correspond to external impulse

d=0,83 $Kg/m^3$ AC 10

DUNGS® Combustion Controls

**Tablas de caudal / Flow tables (SI units)**

| Ø12 | Pressures (Bar) vs Flow ($Nm^3/h$) | | | | | | | |
|---|---|---|---|---|---|---|---|---|
| **Pin / Pout** | **0,3** | **0,4** | **0,5** | **0,7** | **0,9** | **1,1** | **1,3** | **1,5** |
| **0,2** | - | - | - | - | - | - | - | - |
| **0,3** | 0 | - | - | - | - | - | - | - |
| **0,4** | 37 | 0 | - | - | - | - | - | - |
| **0,5** | 53 | 38 | 0 | - | - | - | - | - |
| **0,75** | 79 | 71 | 61 | 29 | - | - | - | - |
| **1** | 99 | 93 | 87 | 70 | 43 | - | - | - |
| **1,5** | 129 | 126 | 122 | 115 | 104 | 89 | 66 | 0 |
| **2** | 155 | 152 | 150 | 146 | 141 | 133 | 123 | 108 |
| **3** | 207 | 202 | 200 | 197 | 195 | 194 | 191 | 187 |
| **4** | 258 | 253 | 249 | 246 | 244 | 242 | 241 | 241 |
| **5** | 310 | 303 | 299 | 295 | 292 | 291 | 290 | 289 |
| **6** | 362 | 353 | 349 | 344 | 341 | 339 | 338 | 337 |
| **7** | 413 | 404 | 399 | 393 | 389 | 387 | 386 | 385 |
| **8** | 465 | 454 | 448 | 442 | 438 | 436 | 434 | 433 |
| **9** | 516 | 505 | 498 | 491 | 487 | 484 | 482 | 481 |
| **10** | 568 | 555 | 548 | 540 | 535 | 532 | 530 | 529 |

*Datos en azul corresponden a toma externa / Values in blue correspond to external impulse

d=0,83 $Kg/m^3$ AC 10

| Ø14 | Pressures (Bar) vs Flow ($Nm^3/h$) | | | | | | | |
|---|---|---|---|---|---|---|---|---|
| **Pin / Pout** | **0,3** | **0,4** | **0,5** | **0,7** | **0,9** | **1,1** | **1,3** | **1,5** |
| **0,2** | - | - | - | - | - | - | - | - |
| **0,3** | 0 | - | - | - | - | - | - | - |
| **0,4** | 38 | 0 | - | - | - | - | - | - |
| **0,5** | 54 | 39 | 0 | - | - | - | - | - |
| **0,75** | 81 | 73 | 63 | 29 | - | - | - | - |
| **1** | 102 | 95 | 89 | 72 | 44 | - | - | - |
| **1,5** | 133 | 129 | 126 | 118 | 107 | 91 | 67 | 0 |
| **2** | 160 | 156 | 154 | 150 | 145 | 137 | 126 | 111 |
| **3** | 212 | 208 | 205 | 202 | 200 | 199 | 196 | 192 |
| **4** | 265 | 260 | 256 | 252 | 250 | 249 | 248 | 247 |
| **5** | 318 | 311 | 307 | 303 | 300 | 299 | 297 | 297 |
| **6** | 371 | 363 | 358 | 353 | 350 | 348 | 347 | 346 |
| **7** | 424 | 415 | 409 | 403 | 400 | 398 | 396 | 395 |
| **8** | 477 | 467 | 460 | 454 | 450 | 448 | 446 | 445 |
| **9** | 530 | 518 | 511 | 504 | 500 | 497 | 495 | 494 |
| **10** | 583 | 570 | 563 | 554 | 550 | 547 | 545 | 543 |

*Datos en azul corresponden a toma externa / Values in blue correspond to external impulse

d=0,83 $Kg/m^3$ AC 10

DUNGS®
Combustion Controls

**Tablas de caudal / Flow tables (Imperial units)**

| Ø8 | Pressures (Psig/"WC) vs Flow (SCFH) | | | | | | | |
|---|---|---|---|---|---|---|---|---|
| **Pin / Pout** | **4 Psig** | **6 Psig** | **7 Psig** | **10 Psig** | **13 Psig** | **16 Psig** | **19 Psig** | **22 Psig** |
| **3 Psig** | - | - | - | - | - | - | - | - |
| **4 Psig** | - | - | - | - | - | - | - | - |
| **6 Psig** | 742 | - | - | - | - | - | - | - |
| **7 Psig** | 1049 | 770 | - | - | - | - | - | - |
| **11 Psig** | 1574 | 1440 | 1260 | 599 | - | - | - | - |
| **15 Psig** | 1963 | 1886 | 1781 | 1468 | 896 | - | - | - |
| **22 Psig** | 2571 | 2553 | 2519 | 2397 | 2194 | 1883 | 1393 | - |
| **29 Psig** | 3085 | 3085 | 3085 | 3056 | 2971 | 2824 | 2606 | 2296 |
| **44 Psig** | 4109 | 4109 | 4109 | 4109 | 4109 | 4104 | 4061 | 3976 |
| **58 Psig** | 5133 | 5133 | 5133 | 5133 | 5133 | 5133 | 5133 | 5133 |
| **73 Psig** | 6157 | 6157 | 6157 | 6157 | 6157 | 6157 | 6157 | 6157 |
| **87 Psig** | 7181 | 7181 | 7181 | 7181 | 7181 | 7181 | 7181 | 7181 |
| **102 Psig** | 8205 | 8205 | 8205 | 8205 | 8205 | 8205 | 8205 | 8205 |
| **116 Psig** | 9229 | 9229 | 9229 | 9229 | 9229 | 9229 | 9229 | 9229 |
| **131 Psig** | 10253 | 10253 | 10253 | 10253 | 10253 | 10253 | 10253 | 10253 |
| **145 Psig** | 11277 | 11277 | 11277 | 11277 | 11277 | 11277 | 11277 | 11277 |

*Datos en azul corresponden a toma externa / Values in blue correspond to external impulse

d=0,05 lb/ft$^3$ AC 10

| Ø10 | Pressures (Psig/"WC) vs Flow (SCFH) | | | | | | | |
|---|---|---|---|---|---|---|---|---|
| **Pin / Pout** | **4 Psig** | **6 Psig** | **7 Psig** | **10 Psig** | **13 Psig** | **16 Psig** | **19 Psig** | **22 Psig** |
| **3 Psig** | - | - | - | - | - | - | - | - |
| **4 Psig** | - | - | - | - | - | - | - | - |
| **6 Psig** | 1100 | - | - | - | - | - | - | - |
| **7 Psig** | 1556 | 1142 | - | - | - | - | - | - |
| **11 Psig** | 2334 | 2136 | 1868 | 889 | - | - | - | - |
| **15 Psig** | 2911 | 2796 | 2641 | 2177 | 1328 | - | - | - |
| **22 Psig** | 3812 | 3786 | 3735 | 3555 | 3253 | 2792 | 2058 | - |
| **29 Psig** | 4575 | 4575 | 4575 | 4532 | 4405 | 4188 | 3851 | 3384 |
| **44 Psig** | 6093 | 6093 | 6093 | 6093 | 6093 | 6085 | 6001 | 5861 |
| **58 Psig** | 7612 | 7612 | 7612 | 7612 | 7612 | 7612 | 7586 | 7566 |
| **73 Psig** | 9130 | 9130 | 9130 | 9130 | 9130 | 9130 | 9099 | 9075 |
| **87 Psig** | 10648 | 10648 | 10648 | 10648 | 10648 | 10648 | 10612 | 10584 |
| **102 Psig** | 12167 | 12167 | 12167 | 12167 | 12167 | 12167 | 12125 | 12094 |
| **116 Psig** | 13685 | 13685 | 13685 | 13685 | 13685 | 13685 | 13639 | 13603 |
| **131 Psig** | 15203 | 15203 | 15203 | 15203 | 15203 | 15203 | 15152 | 15112 |
| **145 Psig** | 16722 | 16722 | 16722 | 16722 | 16722 | 16722 | 16665 | 16621 |

*Datos en azul corresponden a toma externa / Values in blue correspond to external impulse

d=0,05 lb/ft$^3$ AC 10

DUNGS®
Combustion Controls

**Tablas de caudal / Flow tables (Imperial units)**

| Ø12 | Pressures (Psig/"WC) vs Flow (SCFH) | | | | | | | |
|---|---|---|---|---|---|---|---|---|
| **Pin / Pout** | **4 Psig** | **6 Psig** | **7 Psig** | **10 Psig** | **13 Psig** | **16 Psig** | **19 Psig** | **22 Psig** |
| **3 Psig** | - | - | - | - | - | - | - | - |
| **4 Psig** | 0 | - | - | - | - | - | - | - |
| **6 Psig** | 1319 | 0 | - | - | - | - | - | - |
| **7 Psig** | 1866 | 1338 | 0 | - | - | - | - | - |
| **11 Psig** | 2798 | 2503 | 2160 | 1013 | - | - | - | - |
| **15 Psig** | 3490 | 3277 | 3055 | 2480 | 1501 | - | - | - |
| **22 Psig** | 4570 | 4437 | 4320 | 4051 | 3677 | 3139 | 2314 | 0 |
| **29 Psig** | 5484 | 5362 | 5291 | 5164 | 4978 | 4708 | 4329 | 3803 |
| **44 Psig** | 7305 | 7142 | 7048 | 6943 | 6886 | 6841 | 6746 | 6587 |
| **58 Psig** | 9125 | 8921 | 8804 | 8673 | 8602 | 8557 | 8527 | 8504 |
| **73 Psig** | 10945 | 10701 | 10560 | 10403 | 10318 | 10264 | 10228 | 10201 |
| **87 Psig** | 12765 | 12481 | 12316 | 12133 | 12034 | 11971 | 11928 | 11897 |
| **102 Psig** | 14586 | 14260 | 14072 | 13863 | 13750 | 13678 | 13629 | 13594 |
| **116 Psig** | 16406 | 16040 | 15828 | 15593 | 15465 | 15385 | 15330 | 15290 |
| **131 Psig** | 18226 | 17820 | 17585 | 17323 | 17181 | 17092 | 17031 | 16987 |
| **145 Psig** | 20046 | 19600 | 19341 | 19053 | 18897 | 18799 | 18732 | 18683 |

*Datos en azul corresponden a toma externa / Values in blue correspond to external impulse

d=0,05 lb/ft$^3$ AC 10

| Ø14 | Pressures (Psig/"WC) vs Flow (SCFH) | | | | | | | |
|---|---|---|---|---|---|---|---|---|
| **Pin / Pout** | **4 Psig** | **6 Psig** | **7 Psig** | **10 Psig** | **13 Psig** | **16 Psig** | **19 Psig** | **22 Psig** |
| **3 Psig** | - | - | - | - | - | - | - | - |
| **4 Psig** | 0 | - | - | - | - | - | - | - |
| **6 Psig** | 1355 | 0 | - | - | - | - | - | - |
| **7 Psig** | 1916 | 1374 | 0 | - | - | - | - | - |
| **11 Psig** | 2874 | 2571 | 2219 | 1040 | - | - | - | - |
| **15 Psig** | 3585 | 3366 | 3138 | 2548 | 1542 | - | - | - |
| **22 Psig** | 4693 | 4558 | 4437 | 4160 | 3776 | 3224 | 2376 | 0 |
| **29 Psig** | 5633 | 5507 | 5435 | 5303 | 5113 | 4836 | 4446 | 3906 |
| **44 Psig** | 7503 | 7335 | 7238 | 7131 | 7072 | 7026 | 6928 | 6766 |
| **58 Psig** | 9372 | 9163 | 9042 | 8908 | 8835 | 8789 | 8758 | 8735 |
| **73 Psig** | 11242 | 10991 | 10846 | 10685 | 10597 | 10542 | 10505 | 10477 |
| **87 Psig** | 13111 | 12819 | 12650 | 12462 | 12360 | 12296 | 12252 | 12220 |
| **102 Psig** | 14981 | 14647 | 14453 | 14239 | 14122 | 14049 | 13999 | 13962 |
| **116 Psig** | 16850 | 16475 | 16257 | 16016 | 15884 | 15802 | 15746 | 15704 |
| **131 Psig** | 18720 | 18303 | 18061 | 17793 | 17647 | 17555 | 17493 | 17447 |
| **145 Psig** | 20590 | 20131 | 19865 | 19570 | 19409 | 19309 | 19240 | 19189 |

*Datos en azul corresponden a toma externa / Values in blue correspond to external impulse

d=0,05 lb/ft$^3$ AC 10

Plano CAD, no cambiar manualmente!
CAD-Drawing, do not change manually!

This design and/or document is proprietary and protected by copyright.
It may not, without our prior express consent, be copied nor transmitted
to any third party. It must be returned to us upon discharge of the order.

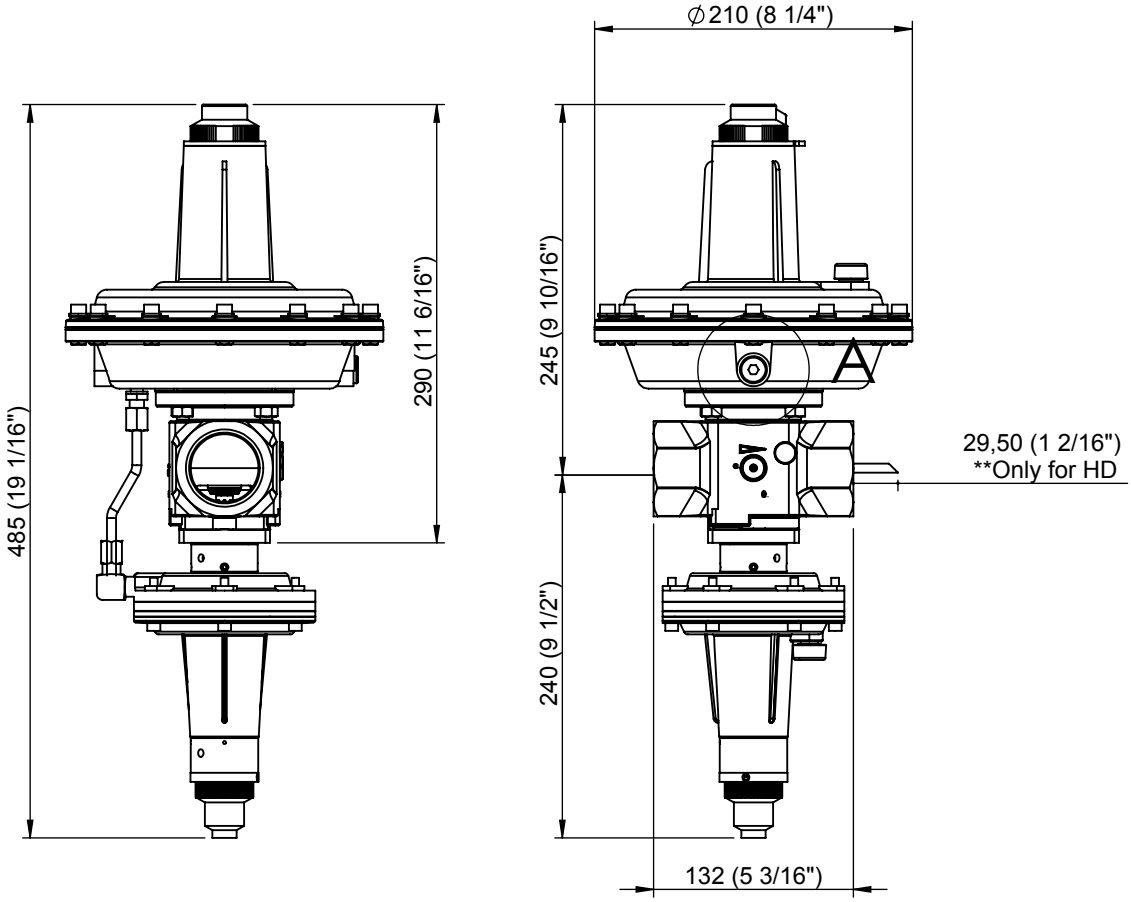


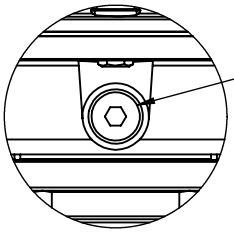

External impulse
connection on request

DETALLE A
ESCALA 2 : 5

Queda prohibida la preproducción total o parcial de este documento
y del contenido del mismo sin la autorización escrita de Karl Dungs S.L.U.
Todos los derechos reservados.

3D

| Rev | Descripción Modificación | Fecha | Nom |
|---|---|---|---|
| | | | |

**Karl Dungs S.L.U.**
**Combustion Controls**
Avinguda de Can Roqueta, 15 - Pol. Can Roqueta
E-08202 - Sabadell
Barcelona - ESPAÑA

| | Fecha | Nombre | Firmado |
|---|---|---|---|
| Dibujado | 31/10/2018 | A.Rof | |
| Verificado | 31/10/2018 | J.Inglés | |
| Aprobado | 31/10/2018 | GX | |

Tolerancias según ISO 2768
TOLERANCIAS GENERALES ISO 2768-mK
(MEDIUM) TOLERANCIAS LINEALES
Roscas a 6g/6H y longitudes +1.0/-0

Rz 12.5 ( )

Eliminar rebabas y cantos vivos

Escala: 1:5

Material:

Acabado:

Tratamiento:

Peso: 8139.00 gr.

Descripción:
DIMENSIONS FRM-NOC10015ND/MD/HD

| Código Pieza | Rev. | Formato | Pág. |
|---|---|---|---|
| FRM-NOC10015ND_MD_HD | 0 | A4 | 1 de 1 |

Dimensiones en mm (inch)

## ESPECIFICACIONES TÉCNICAS / TECHNICAL SPECIFICATION

DUNGS®
Combustion Controls

Regulador de presión con válvula de seguridad, conforme a las normas EN-334 y EN-14382 /
Pressure regulator with safety shut-off valve, in accordance with the standards EN-334 and EN-14382

| | |
|---|---|
| Presión de operación / Operating pressure | Max. 10 Bar / 1000 kPa / 145 Psig |
| Rango de presión de salida FRM / Outlet pressure range FRM | Ver tabla de Selección / See Set point Table |
| Temperatura máxima ambiental / Ambient maximum temperature | 60 ºC / 145ºF |
| Temperatura minima ambiental / Ambient minimum temperature | -20 ºC / -10 ºF |
| Fluido / Flow | Gas Natural, GLP / Natural Gas, LPG |
| Posición de montaje / Mounting Position | 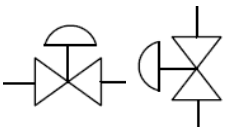 *Puede variar el tarado para presiones inferiores a 300 mbar / for pressures below 300 mbar setpoint can be altered |
| Tipo de Construcción / Construction Type: | DS (De resistencia diferencial) / DS (Diferential strenght) |
| Materiales / Materials — Cuerpo / Body | Hierro fundido / Cast iron EN GJS 500-7 or EN GJS 400-15 |
| Actuador / Actuator | Aluminio / Aluminium |
| Membranas / Membranes | NBR EN549 conform |
| Diametro Nominal / Nominal Diameter | Rosca 1 1/2" BSP o NPT / Thread 1 1/2" BSP or NPT |

| | BSP / SAV | BSP | NPT / SAV | NPT |
|---|---|---|---|---|
| Codigo de producto / Product's code | 279049 | 279063 | 280231 | 280243 |

Producto diseñado acorde a las normas EN-334 y EN-14382 / Product designed in accordance to EN-334 and EN-14382
Categoría III (Regulador) y IV (Válvula de seguridad) acorde a PED 2014/68/UE & CRN B51.14 pendiente
Product category III (Regulator) and IV (Safety valve) according to PED 2014/68/UE & CRN B51.14 pending

| Muelle de regulación / Regulation spring | | | | | | | | | | | |
|---|---|---|---|---|---|---|---|---|---|---|---|
| Ø hilo / wire | Rango / Range (min-Max) | | | | | | | | | Color/Color | codigo/code |
| 10 | 1000 | 1600 | (mbar) | 100 | 160 | (kPa) | 14,5 | 23,2 | (psig) | lila/purple | 286389 |
| 11 | 1500 | 2400 | (mbar) | 150 | 240 | (kPa) | 21,8 | 34,8 | (psig) | naranja/orange | 286390 |
| 12 | 2300 | 3600 | (mbar) | 230 | 360 | (kPa) | 33,4 | 52,2 | (psig) | rosa/pink | 286393 |
| 13 | 3500 | 4000 | (mbar) | 350 | 400 | (kPa) | 50,8 | 58 | (psig) | rojo/red | 286394 |

| Muelle de mínima presión / Under pressure spring (UPSO) | | | | | | | | | | | |
|---|---|---|---|---|---|---|---|---|---|---|---|
| Ø hilo / wire | Rango / Range (min-Max) | | | | | | | | | Color/Color | codigo/code |
| 2,5 | 150 | 500 | (mbar) | 15 | 50 | (kPa) | 2,2 | 7,3 | (psig) | lila/purple | 270178 |
| 2,8 | 300 | 1000 | (mbar) | 30 | 100 | (kPa) | 4,4 | 14,5 | (psig) | naranja/orange | 270179 |
| 3 | 800 | 1400 | (mbar) | 80 | 140 | (kPa) | 11,6 | 20,3 | (psig) | plata/silver | 270180 |
| 3,5 | 1200 | 3000 | (mbar) | 120 | 300 | (kPa) | 17,4 | 43,5 | (psig) | rosa/pink | 270124 |

| Muelle de máxima presión / Over pressure spring (OPSO) | | | | | | | | | | | |
|---|---|---|---|---|---|---|---|---|---|---|---|
| Ø hilo / wire | Rango / Range (min-Max) | | | | | | | | | Color/Color | codigo/code |
| 4,5 | 1300 | 2500 | (mbar) | 130 | 250 | (kPa) | 18,9 | 36,3 | (psig) | naranja/orange | 270188 |
| 4,8 | 1800 | 3500 | (mbar) | 180 | 350 | (kPa) | 26,1 | 50,8 | (psig) | rosa/pink | 270189 |
| 5 | 2500 | 5000 | (mbar) | 250 | 500 | (kPa) | 36,3 | 72,5 | (psig) | blanco/white | 271114 |

| Orificios / Orifices | | | | | | | | | | |
|---|---|---|---|---|---|---|---|---|---|---|
| Medida/size | Ø8 | | Ø10 | | Ø12 | | Ø14 | | | |
| $P_{umax}$* (bar/psig) | 10 | 145 | 10 | 145 | 10 | 145 | 10 | 145 | | |

*Máxima presión de entrada / Maximum inlet pressure

Regulador de gas para media presión / Gas regulator for medium pressure
**FRM-NOC 100015UHD / SAV HD**

DUNGS® Combustion Controls

**Tablas de caudal / Flow tables (SI units)**

| Ø8 | Pressures (Bar) vs Flow ($Nm^3/h$) | | | | | | | |
|---|---|---|---|---|---|---|---|---|
| **Pin / Pout** | **1** | **1,25** | **1,5** | **1,75** | **2** | **2,5** | **3** | **4** |
| **0,2** | - | - | - | - | - | - | - | - |
| **0,3** | - | - | - | - | - | - | - | - |
| **0,4** | - | - | - | - | - | - | - | - |
| **0,5** | - | - | - | - | - | - | - | - |
| **0,75** | - | - | - | - | - | - | - | - |
| **1** | - | - | - | - | - | - | - | - |
| **1,5** | 58 | 44 | - | - | - | - | - | - |
| **2** | 82 | 76 | 65 | 48 | - | - | - | - |
| **3** | 116 | 115 | 113 | 108 | 101 | 77 | - | - |
| **4** | 145 | 145 | 145 | 145 | 142 | 133 | 116 | - |
| **5** | 174 | 174 | 174 | 174 | 174 | 172 | 164 | 130 |
| **6** | 203 | 203 | 203 | 203 | 203 | 203 | 201 | 184 |
| **7** | 232 | 232 | 232 | 232 | 232 | 232 | 232 | 225 |
| **8** | 261 | 261 | 261 | 261 | 261 | 261 | 261 | 260 |
| **9** | 290 | 290 | 290 | 290 | 290 | 290 | 290 | 290 |
| **10** | 319 | 319 | 319 | 319 | 319 | 319 | 319 | 319 |

*Datos en azul corresponden a toma externa / Values in blue correspond to external impulse

d=0,83 $Kg/m^3$ AC 10

| Ø10 | Pressures (Bar) vs Flow ($Nm^3/h$) | | | | | | | |
|---|---|---|---|---|---|---|---|---|
| **Pin / Pout** | **1** | **1,25** | **1,5** | **1,75** | **2** | **2,5** | **3** | **4** |
| **0,2** | - | - | - | - | - | - | - | - |
| **0,3** | - | - | - | - | - | - | - | - |
| **0,4** | - | - | - | - | - | - | - | - |
| **0,5** | - | - | - | - | - | - | - | - |
| **0,75** | - | - | - | - | - | - | - | - |
| **1** | - | - | - | - | - | - | - | - |
| **1,5** | 82 | 62 | - | - | - | - | - | - |
| **2** | 116 | 107 | 92 | 68 | - | - | - | - |
| **3** | 165 | 163 | 159 | 152 | 142 | 109 | - | - |
| **4** | 206 | 206 | 206 | 204 | 201 | 188 | 164 | - |
| **5** | 247 | 247 | 247 | 247 | 247 | 243 | 232 | 184 |
| **6** | 288 | 288 | 288 | 288 | 288 | 288 | 285 | 260 |
| **7** | 329 | 329 | 329 | 329 | 329 | 329 | 329 | 318 |
| **8** | 370 | 370 | 370 | 370 | 370 | 370 | 370 | 367 |
| **9** | 411 | 411 | 411 | 411 | 411 | 411 | 411 | 411 |
| **10** | 452 | 452 | 452 | 452 | 452 | 452 | 452 | 452 |

*Datos en azul corresponden a toma externa / Values in blue correspond to external impulse

d=0,83 $Kg/m^3$ AC 10

DUNGS®
Combustion Controls

**Tablas de caudal / Flow tables (SI units)**

| Ø12 | Pressures (Bar) vs Flow ($Nm^3/h$) | | | | | | | |
|---|---|---|---|---|---|---|---|---|
| **Pin / Pout** | **1** | **1,25** | **1,5** | **1,75** | **2** | **2,5** | **3** | **4** |
| **0,2** | - | - | - | - | - | - | - | - |
| **0,3** | - | - | - | - | - | - | - | - |
| **0,4** | - | - | - | - | - | - | - | - |
| **0,5** | - | - | - | - | - | - | - | - |
| **0,75** | - | - | - | - | - | - | - | - |
| **1** | - | - | - | - | - | - | - | - |
| **1,5** | 104 | 83 | - | - | - | - | - | - |
| **2** | 147 | 143 | 129 | 98 | - | - | - | - |
| **3** | 207 | 219 | 223 | 219 | 205 | 156 | - | - |
| **4** | 259 | 276 | 288 | 294 | 290 | 271 | 236 | - |
| **5** | 311 | 331 | 345 | 355 | 355 | 350 | 334 | 264 |
| **6** | 362 | 386 | 403 | 414 | 414 | 414 | 409 | 374 |
| **7** | 414 | 441 | 460 | 473 | 473 | 473 | 473 | 458 |
| **8** | 466 | 496 | 518 | 532 | 532 | 532 | 532 | 528 |
| **9** | 518 | 551 | 575 | 591 | 591 | 591 | 591 | 591 |
| **10** | 569 | 606 | 633 | 650 | 650 | 650 | 650 | 650 |

*Datos en azul corresponden a toma externa / Values in blue correspond to external impulse

d=0,83 $Kg/m^3$ AC 10

| Ø14 | Pressures (Bar) vs Flow ($Nm^3/h$) | | | | | | | |
|---|---|---|---|---|---|---|---|---|
| **Pin / Pout** | **1** | **1,25** | **1,5** | **1,75** | **2** | **2,5** | **3** | **4** |
| **0,2** | - | - | - | - | - | - | - | - |
| **0,3** | - | - | - | - | - | - | - | - |
| **0,4** | - | - | - | - | - | - | - | - |
| **0,5** | - | - | - | - | - | - | - | - |
| **0,75** | - | - | - | - | - | - | - | - |
| **1** | - | - | - | - | - | - | - | - |
| **1,5** | 108 | 87 | - | - | - | - | - | - |
| **2** | 153 | 150 | 135 | 103 | - | - | - | - |
| **3** | 217 | 229 | 233 | 231 | 221 | 175 | - | - |
| **4** | 271 | 288 | 301 | 309 | 312 | 303 | 271 | - |
| **5** | 325 | 346 | 361 | 373 | 382 | 391 | 383 | 312 |
| **6** | 379 | 403 | 421 | 435 | 446 | 462 | 469 | 442 |
| **7** | 433 | 461 | 481 | 497 | 510 | 528 | 542 | 541 |
| **8** | 487 | 518 | 541 | 559 | 573 | 594 | 609 | 625 |
| **9** | 541 | 576 | 602 | 621 | 637 | 660 | 677 | 699 |
| **10** | 595 | 633 | 662 | 683 | 701 | 726 | 744 | 768 |

*Datos en azul corresponden a toma externa / Values in blue correspond to external impulse

d=0,83 $Kg/m^3$ AC 10

DUNGS®
Combustion Controls

**Tablas de caudal / Flow tables (Imperial units)**

| Ø8 | Pressures (Psig/"WC) vs Flow (SCFH) | | | | | | | |
|---|---|---|---|---|---|---|---|---|
| **Pin / Pout** | **15 Psig** | **18 Psig** | **22 Psig** | **25 Psig** | **29 Psig** | **36 Psig** | **44 Psig** | **58 Psig** |
| **3 psig** | - | - | - | - | - | - | - | - |
| **4 psig** | - | - | - | - | - | - | - | - |
| **6 psig** | - | - | - | - | - | - | - | - |
| **7 psig** | - | - | - | - | - | - | - | - |
| **11 psig** | - | - | - | - | - | - | - | - |
| **15 psig** | - | - | - | - | - | - | - | - |
| **22 psig** | 2055 | 1540 | - | - | - | - | - | - |
| **29 psig** | 2906 | 2668 | 2296 | 1702 | - | - | - | - |
| **44 psig** | 4109 | 4076 | 3976 | 3806 | 3555 | 2714 | - | - |
| **58 psig** | 5133 | 5133 | 5133 | 5106 | 5027 | 4701 | 4103 | - |
| **73 psig** | 6157 | 6157 | 6157 | 6157 | 6157 | 6069 | 5802 | 4585 |
| **87 psig** | 7181 | 7181 | 7181 | 7181 | 7181 | 7181 | 7106 | 6485 |
| **102 psig** | 8205 | 8205 | 8205 | 8205 | 8205 | 8205 | 8205 | 7942 |
| **116 psig** | 9229 | 9229 | 9229 | 9229 | 9229 | 9229 | 9229 | 9171 |
| **131 psig** | 10253 | 10253 | 10253 | 10253 | 10253 | 10253 | 10253 | 10253 |
| **145 psig** | 11277 | 11277 | 11277 | 11277 | 11277 | 11277 | 11277 | 11277 |

*Datos en azul corresponden a toma externa / Values in blue correspond to external impulse

d=0,05 lb/ft$^3$ AC 10

| Ø10 | Pressures (Psig/"WC) vs Flow (SCFH) | | | | | | | |
|---|---|---|---|---|---|---|---|---|
| **Pin / Pout** | **15 Psig** | **18 Psig** | **22 Psig** | **25 Psig** | **29 Psig** | **36 Psig** | **44 Psig** | **58 Psig** |
| **3 psig** | - | - | - | - | - | - | - | - |
| **4 psig** | - | - | - | - | - | - | - | - |
| **6 psig** | - | - | - | - | - | - | - | - |
| **7 psig** | - | - | - | - | - | - | - | - |
| **11 psig** | - | - | - | - | - | - | - | - |
| **15 psig** | - | - | - | - | - | - | - | - |
| **22 psig** | 2905 | 2178 | - | - | - | - | - | - |
| **29 psig** | 4108 | 3772 | 3246 | 2406 | - | - | - | - |
| **44 psig** | 5810 | 5762 | 5622 | 5381 | 5026 | 3837 | - | - |
| **58 psig** | 7258 | 7258 | 7257 | 7219 | 7108 | 6647 | 5800 | - |
| **73 psig** | 8705 | 8705 | 8705 | 8705 | 8705 | 8581 | 8203 | 6483 |
| **87 psig** | 10153 | 10153 | 10153 | 10153 | 10153 | 10153 | 10047 | 9168 |
| **102 psig** | 11601 | 11601 | 11601 | 11601 | 11601 | 11601 | 11601 | 11229 |
| **116 psig** | 13048 | 13048 | 13048 | 13048 | 13048 | 13048 | 13048 | 12966 |
| **131 psig** | 14496 | 14496 | 14496 | 14496 | 14496 | 14496 | 14496 | 14496 |
| **145 psig** | 15944 | 15944 | 15944 | 15944 | 15944 | 15944 | 15944 | 15944 |

*Datos en azul corresponden a toma externa / Values in blue correspond to external impulse

d=0,05 lb/ft$^3$ AC 10

DUNGS®
Combustion Controls

**Tablas de caudal / Flow tables (Imperial units)**

| Ø12 | Pressures (Psig/"WC) vs Flow (SCFH) | | | | | | | |
|---|---|---|---|---|---|---|---|---|
| **Pin / Pout** | **15 Psig** | **18 Psig** | **22 Psig** | **25 Psig** | **29 Psig** | **36 Psig** | **44 Psig** | **58 Psig** |
| **3 psig** | - | - | - | - | - | - | - | - |
| **4 psig** | - | - | - | - | - | - | - | - |
| **6 psig** | - | - | - | - | - | - | - | - |
| **7 psig** | - | - | - | - | - | - | - | - |
| **11 psig** | - | - | - | - | - | - | - | - |
| **15 psig** | - | - | - | - | - | - | - | - |
| **22 psig** | 3662 | 2921 | - | - | - | - | - | - |
| **29 psig** | 5179 | 5059 | 4546 | 3463 | - | - | - | - |
| **44 psig** | 7324 | 7728 | 7875 | 7743 | 7232 | 5522 | - | - |
| **58 psig** | 9150 | 9734 | 10166 | 10389 | 10228 | 9565 | 8347 | - |
| **73 psig** | 10975 | 11675 | 12194 | 12527 | 12527 | 12348 | 11804 | 9329 |
| **87 psig** | 12800 | 13617 | 14222 | 14610 | 14610 | 14610 | 14457 | 13193 |
| **102 psig** | 14625 | 15559 | 16250 | 16694 | 16694 | 16694 | 16694 | 16158 |
| **116 psig** | 16450 | 17500 | 18278 | 18777 | 18777 | 18777 | 18777 | 18658 |
| **131 psig** | 18276 | 19442 | 20306 | 20860 | 20860 | 20860 | 20860 | 20860 |
| **145 psig** | 20101 | 21384 | 22334 | 22944 | 22944 | 22944 | 22944 | 22944 |

*Datos en azul corresponden a toma externa / Values in blue correspond to external impulse

d=0,05 lb/ft$^3$ AC 10

| Ø14 | Pressures (Psig/"WC) vs Flow (SCFH) | | | | | | | |
|---|---|---|---|---|---|---|---|---|
| **Pin / Pout** | **15 Psig** | **18 Psig** | **22 Psig** | **25 Psig** | **29 Psig** | **36 Psig** | **44 Psig** | **58 Psig** |
| **3 psig** | - | - | - | - | - | - | - | - |
| **4 psig** | - | - | - | - | - | - | - | - |
| **6 psig** | - | - | - | - | - | - | - | - |
| **7 psig** | - | - | - | - | - | - | - | - |
| **11 psig** | - | - | - | - | - | - | - | - |
| **15 psig** | - | - | - | - | - | - | - | - |
| **22 psig** | 3831 | 3055 | - | - | - | - | - | - |
| **29 psig** | 5417 | 5292 | 4756 | 3642 | - | - | - | - |
| **44 psig** | 7661 | 8084 | 8237 | 8143 | 7797 | 6171 | - | - |
| **58 psig** | 9571 | 10181 | 10634 | 10925 | 11027 | 10689 | 9561 | - |
| **73 psig** | 11480 | 12212 | 12755 | 13173 | 13505 | 13799 | 13522 | 11031 |
| **87 psig** | 13389 | 14243 | 14876 | 15364 | 15752 | 16328 | 16560 | 15600 |
| **102 psig** | 15298 | 16274 | 16998 | 17555 | 17998 | 18656 | 19122 | 19106 |
| **116 psig** | 17207 | 18306 | 19119 | 19746 | 20244 | 20984 | 21509 | 22062 |
| **131 psig** | 19116 | 20337 | 21240 | 21937 | 22490 | 23312 | 23895 | 24666 |
| **145 psig** | 21026 | 22368 | 23362 | 24127 | 24736 | 25641 | 26282 | 27129 |

*Datos en azul corresponden a toma externa / Values in blue correspond to external impulse

d=0,05 lb/ft$^3$ AC 10

Plano CAD, no cambiar manualmente!
CAD-Drawing, do not change manually!

This design and/or document is proprietary and protected by copyright.
It may not, without our prior express consent, be copied nor transmitted
to any third party. It must be returned to us upon discharge of the order.

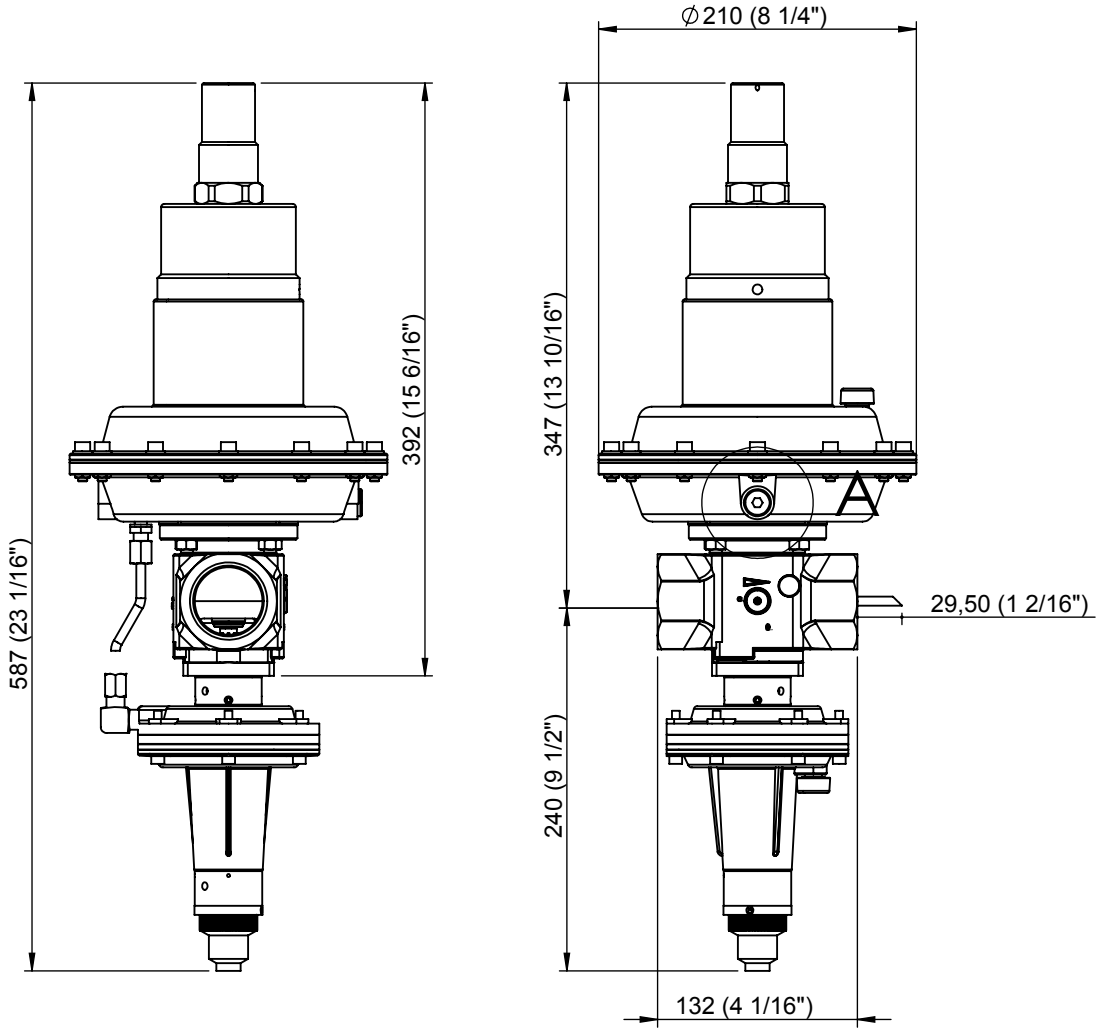


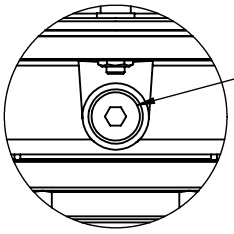

External impulse
connection on request

DETALLE A
ESCALA 2 : 5

3D

| Rev | Descripción Modificación | Fecha | Nom |
|---|---|---|---|
| | | | |

**Karl Dungs S.L.U.**
**Combustion Controls**
Avinguda de Can Roqueta, 15 - Pol. Can Roqueta
E-08202 - Sabadell
Barcelona - ESPAÑA

| | Fecha | Nombre | Firmado |
|---|---|---|---|
| Dibujado | 31/10/2018 | A. Rof | |
| Verificado | 31/10/2018 | J. Inglés | |
| Aprobado | 31/10/2018 | GX | |

Tolerancias según ISO 2768
TOLERANCIAS GENERALES ISO 2768-mK
(MEDIUM) TOLERANCIAS LINEALES
Roscas a 6g/6H y longitudes +1.0/-0

Rz 12.5 ( )

Eliminar rebabas y cantos vivos

Escala: 1:5

Material:

Acabado:

Tratamiento:

Peso: 12089.94 gr.

Descripción:
DIMENSIONS FRM-NOC10015UHD

| Código Pieza | Rev. | Formato | Pág. |
|---|---|---|---|
| FRM-NOC10015UHD | 0 | A4 | 1 de 1 |

Dimensiones en mm (inch)

Queda prohibida la preproducción total o parcial de este documento
y del contenido del mismo sin la autorización escrita de Karl Dungs S.L.U.
Todos los derechos reservados.

## ESPECIFICACIONES TÉCNICAS / TECHNICAL SPECIFICATION

DUNGS®
Combustion Controls

Regulador de presión con válvula de seguridad, conforme a las normas EN-334 y EN-14382 /
Pressure regulator with safety shut-off valve, in accordance with the standards EN-334 and EN-14382

| | |
|---|---|
| Presión de operación / Operating pressure | Max. 10 Bar / 1000 kPa / 145 Psig |
| Rango de presión de salida FRM / Outlet pressure range FRM | Ver tabla de Selección / See Set point Table |
| Temperatura máxima ambiental / Ambient maximum temperature | 60 ºC / 145ºF |
| Temperatura minima ambiental / Ambient minimum temperature | -20 ºC / -10 ºF |
| Fluido / Flow | Gas Natural, GLP / Natural Gas, LPG |
| Posición de montaje / Mounting Position | *Puede variar el tarado para presiones inferiores a 300 mbar / for pressures below 300 mbar setpoint can be altered |
| Tipo de Construcción / Construction Type: | DS (De resistencia diferencial) / DS (Diferential strenght) |
| Materiales / Materials — Cuerpo / Body | Hierro fundido / Cast iron EN GJS 500-7 or EN GJS 400-15 |
| Actuador / Actuator | Aluminio / Aluminium |
| Membranas / Membranes | NBR EN549 conform |
| Diametro Nominal / Nominal Diameter | Rosca 2" BSP o NPT / Thread 2" BSP or NPT |

| Codigo de producto / Product's code | BSP / SAV | BSP | NPT / SAV | NPT |
|---|---|---|---|---|
| | 279073 | 279085 | 280248 | 280260 |

Producto diseñado acorde a las normas EN-334 y EN-14382 / Product designed in accordance to EN-334 and EN-14382
Categoría III (Regulador) y IV (Válvula de seguridad) acorde a PED 2014/68/UE & CRN B51.14 pendiente
Product category III (Regulator) and IV (Safety valve) according to PED 2014/68/UE & CRN B51.14 pending

| Muelle de regulación / Regulation spring | | | | | | | | | | | |
|---|---|---|---|---|---|---|---|---|---|---|---|
| Ø hilo / wire | Rango / Range (min-Max) | | | | | | | | | Color/Color | codigo/code |
| 3,5 | 20 | 25 | (mbar) | 2 | 2,5 | (kPa) | 10 | 10 | ("WC) | amarillo/yellow | 286379 |
| 4 | 25 | 46 | (mbar) | 2,5 | 4,6 | (kPa) | 10 | 20 | ("WC) | azul/blue | 286380 |
| 4,5 | 30 | 65 | (mbar) | 3 | 6,5 | (kPa) | 10 | 30 | ("WC) | negro/black | 286381 |
| 5 | 50 | 100 | (mbar) | 5 | 10 | (kPa) | 20 | 40 | ("WC) | blanco/white | 287682 |

| Muelle de mínima presión / Under pressure spring (UPSO) | | | | | | | | | | | |
|---|---|---|---|---|---|---|---|---|---|---|---|
| Ø hilo / wire | Rango / Range (min-Max) | | | | | | | | | Color/Color | codigo/code |
| 1,25 | 10 | 32 | (mbar) | 1 | 3,2 | (kPa) | 0 | 10 | ("WC) | Blanco/white | 270171 |
| 1,5 | 24 | 40 | (mbar) | 2,4 | 4 | (kPa) | 10 | 20 | ("WC) | Amarillo/yellow | 270175 |
| 2 | 30 | 115 | (mbar) | 3 | 11,5 | (kPa) | 10 | 50 | ("WC) | azul/blue | 270176 |

| Muelle de máxima presión / Over pressure spring (OPSO) | | | | | | | | | | | |
|---|---|---|---|---|---|---|---|---|---|---|---|
| Ø hilo / wire | Rango / Range (min-Max) | | | | | | | | | Color/Color | codigo/code |
| 2,25 | 40 | 130 | (mbar) | 4 | 13 | (kPa) | 20 | 1,9 | ("WC) | plata/silver | 270181 |
| 2,5 | 60 | 190 | (mbar) | 6 | 19 | (kPa) | 20 | 2,8 | ("WC) | verde/green | 270182 |
| 2,75 | 90 | 240 | (mbar) | 9 | 24 | (kPa) | 40 | 3,5 | ("WC) | rojo/red | 270183 |

| Orificios / Orifices | | | | | | |
|---|---|---|---|---|---|---|
| Medida/size | Ø10 | Ø12 | Ø16 | Ø20 | Ø25 | |
| $P_{umax}$* (bar/psig) | 10 / 145 | 10 / 145 | 10 / 145 | 8 / 116 | 06 / 087 | |

*Máxima presión de entrada / Maximum inlet pressure

Regulador de gas para media presión / Gas regulator for medium pressure
**FRM-NOC 10020 ND / SAV ND**

DUNGS®
Combustion Controls

**Tablas de caudal / Flow tables (SI units)**

| Ø10 | Pressures (Bar) vs Flow ($Nm^3/h$) | | | | | | | |
|---|---|---|---|---|---|---|---|---|
| **Pin / Pout** | **0,02** | **0,03** | **0,04** | **0,05** | **0,06** | **0,07** | **0,08** | **0,1** |
| **0,2** | 42 | 41 | 40 | 39 | 38 | 37 | 36 | 33 |
| **0,3** | 53 | 52 | 51 | 51 | 50 | 49 | 48 | 46 |
| **0,4** | 61 | 61 | 60 | 60 | 59 | 58 | 58 | 57 |
| **0,5** | 69 | 68 | 68 | 67 | 67 | 67 | 66 | 65 |
| **0,75** | 84 | 84 | 84 | 83 | 83 | 83 | 83 | 82 |
| **1** | 97 | 97 | 97 | 96 | 96 | 96 | 96 | 96 |
| **1,5** | 119 | 119 | 119 | 119 | 119 | 119 | 119 | 119 |
| **2** | 140 | 140 | 140 | 140 | 140 | 140 | 140 | 140 |
| **3** | 181 | 181 | 181 | 181 | 181 | 181 | 181 | 181 |
| **4** | 218 | 218 | 218 | 218 | 218 | 218 | 218 | 218 |
| **5** | 253 | 253 | 253 | 253 | 253 | 253 | 253 | 253 |
| **6** | 284 | 284 | 284 | 284 | 284 | 284 | 284 | 284 |
| **7** | 313 | 313 | 313 | 313 | 313 | 313 | 313 | 313 |
| **8** | 338 | 338 | 338 | 338 | 338 | 338 | 338 | 338 |
| **9** | 437 | 437 | 437 | 437 | 437 | 437 | 437 | 437 |
| **10** | 480 | 480 | 480 | 480 | 480 | 480 | 480 | 480 |

*Datos en azul corresponden a toma externa / Values in blue correspond to external impulse

d=0,83 $Kg/m^3$ AC 10

| Ø16 | Pressures (Bar) vs Flow ($Nm^3/h$) | | | | | | | |
|---|---|---|---|---|---|---|---|---|
| **Pin / Pout** | **0,02** | **0,03** | **0,04** | **0,05** | **0,06** | **0,07** | **0,08** | **0,1** |
| **0,2** | 92 | 90 | 87 | 85 | 82 | 80 | 77 | 71 |
| **0,3** | 113 | 112 | 110 | 109 | 107 | 105 | 103 | 100 |
| **0,4** | 131 | 130 | 129 | 128 | 126 | 125 | 124 | 121 |
| **0,5** | 146 | 145 | 144 | 144 | 143 | 142 | 141 | 138 |
| **0,75** | 176 | 176 | 176 | 175 | 175 | 174 | 174 | 173 |
| **1** | 200 | 200 | 200 | 200 | 200 | 200 | 200 | 199 |
| **1,5** | 319 | 319 | 319 | 319 | 319 | 319 | 319 | 319 |
| **2** | 383 | 383 | 383 | 383 | 383 | 383 | 383 | 383 |
| **3** | 510 | 510 | 510 | 510 | 510 | 510 | 510 | 510 |
| **4** | 637 | 637 | 637 | 637 | 637 | 637 | 637 | 637 |
| **5** | 764 | 764 | 764 | 764 | 764 | 764 | 764 | 764 |
| **6** | 891 | 891 | 891 | 891 | 891 | 891 | 891 | 891 |
| **7** | 1018 | 1018 | 1018 | 1018 | 1018 | 1018 | 1018 | 1018 |
| **8** | 1145 | 1145 | 1145 | 1145 | 1145 | 1145 | 1145 | 1145 |
| **9** | 1273 | 1273 | 1273 | 1273 | 1273 | 1273 | 1273 | 1273 |
| **10** | 0 | 0 | 1400 | 1400 | 1400 | 1400 | 1400 | 1400 |

*Datos en azul corresponden a toma externa / Values in blue correspond to external impulse

d=0,83 $Kg/m^3$ AC 10

DUNGS®
Combustion Controls

**Tablas de caudal / Flow tables (SI units)**

| Ø20 | Pressures (Bar) vs Flow ($Nm^3/h$) | | | | | | | |
|---|---|---|---|---|---|---|---|---|
| **Pin / Pout** | **0,02** | **0,03** | **0,04** | **0,05** | **0,06** | **0,07** | **0,08** | **0,1** |
| **0,2** | 110 | 108 | 105 | 102 | 99 | 96 | 93 | 85 |
| **0,3** | 137 | 135 | 133 | 131 | 129 | 127 | 125 | 120 |
| **0,4** | 159 | 157 | 156 | 155 | 153 | 151 | 150 | 146 |
| **0,5** | 177 | 176 | 175 | 174 | 173 | 172 | 171 | 168 |
| **0,75** | 216 | 215 | 215 | 214 | 214 | 213 | 213 | 211 |
| **1** | 247 | 246 | 246 | 246 | 246 | 246 | 246 | 245 |
| **1,5** | 459 | 459 | 459 | 459 | 459 | 459 | 459 | 459 |
| **2** | 551 | 551 | 551 | 551 | 551 | 551 | 551 | 551 |
| **3** | 733 | 733 | 733 | 733 | 733 | 733 | 733 | 733 |
| **4** | 916 | 916 | 916 | 916 | 916 | 916 | 916 | 916 |
| **5** | 1099 | 1099 | 1099 | 1099 | 1099 | 1099 | 1099 | 1099 |
| **6** | 1282 | 1282 | 1282 | 1282 | 1282 | 1282 | 1282 | 1282 |
| **7** | 0 | 0 | 1464 | 1464 | 1464 | 1464 | 1464 | 1464 |
| **8** | 0 | 0 | 0 | 1647 | 1647 | 1647 | 1647 | 1647 |
| **9** | 0 | 0 | 0 | 0 | 1830 | 1830 | 1830 | 1830 |
| **10** | 0 | 0 | 0 | 0 | 0 | 2013 | 2013 | 2013 |

*Datos en azul corresponden a toma externa / Values in blue correspond to external impulse

d=0,83 $Kg/m^3$ AC 10

| Ø25 | Pressures (Bar) vs Flow ($Nm^3/h$) | | | | | | | |
|---|---|---|---|---|---|---|---|---|
| **Pin / Pout** | **0,02** | **0,03** | **0,04** | **0,05** | **0,06** | **0,07** | **0,08** | **0,1** |
| **0,2** | 134 | 136 | 133 | 129 | 125 | 121 | 117 | 108 |
| **0,3** | 167 | 171 | 169 | 166 | 164 | 161 | 158 | 152 |
| **0,4** | 194 | 200 | 198 | 196 | 194 | 192 | 190 | 186 |
| **0,5** | 217 | 224 | 223 | 221 | 220 | 218 | 217 | 214 |
| **0,75** | 265 | 275 | 274 | 273 | 273 | 272 | 271 | 270 |
| **1** | 489 | 508 | 507 | 507 | 507 | 506 | 506 | 505 |
| **1,5** | 610 | 634 | 634 | 634 | 634 | 634 | 634 | 634 |
| **2** | 732 | 760 | 760 | 760 | 760 | 760 | 760 | 760 |
| **3** | 974 | 1013 | 1013 | 1013 | 1013 | 1013 | 1013 | 1013 |
| **4** | 1217 | 1265 | 1265 | 1265 | 1265 | 1265 | 1265 | 1265 |
| **5** | 1460 | 1517 | 1517 | 1517 | 1517 | 1517 | 1517 | 1517 |
| **6** | 0 | 0 | 1770 | 1770 | 1770 | 1770 | 1770 | 1770 |
| **7** | 0 | 0 | 0 | 2022 | 2022 | 2022 | 2022 | 2022 |
| **8** | 0 | 0 | 0 | 0 | 2274 | 2274 | 2274 | 2274 |
| **9** | 0 | 0 | 0 | 0 | 0 | 2527 | 2527 | 2527 |
| **10** | 0 | 0 | 0 | 0 | 0 | 0 | 0 | 0 |

*Datos en azul corresponden a toma externa / Values in blue correspond to external impulse

d=0,83 $Kg/m^3$ AC 10

DUNGS®
Combustion Controls

**Tablas de caudal / Flow tables (Imperial units)**

| Ø10 | Pressures (Psig/"WC) vs Flow (SCFH) | | | | | | | |
|---|---|---|---|---|---|---|---|---|
| **Pin / Pout** | **8 "WC** | **12 "WC** | **16 "WC** | **20 "WC** | **24 "WC** | **28 "WC** | **32 "WC** | **40 "WC** |
| **3 Psig** | 1498 | 1463 | 1426 | 1387 | 1347 | 1304 | 1258 | 1159 |
| **4 Psig** | 1863 | 1838 | 1812 | 1786 | 1758 | 1729 | 1699 | 1634 |
| **6 Psig** | 2164 | 2145 | 2126 | 2106 | 2086 | 2065 | 2042 | 1996 |
| **7 Psig** | 2424 | 2410 | 2396 | 2381 | 2366 | 2349 | 2333 | 2297 |
| **11 Psig** | 2967 | 2961 | 2954 | 2947 | 2940 | 2932 | 2924 | 2906 |
| **15 Psig** | 3411 | 3410 | 3408 | 3406 | 3404 | 3402 | 3399 | 3393 |
| **22 Psig** | 4193 | 4193 | 4193 | 4193 | 4193 | 4193 | 4193 | 4193 |
| **29 Psig** | 4947 | 4947 | 4947 | 4947 | 4947 | 4947 | 4947 | 4947 |
| **44 Psig** | 6377 | 6377 | 6377 | 6377 | 6377 | 6377 | 6377 | 6377 |
| **58 Psig** | 7700 | 7700 | 7700 | 7700 | 7700 | 7700 | 7700 | 7700 |
| **73 Psig** | 8918 | 8918 | 8918 | 8918 | 8918 | 8918 | 8918 | 8918 |
| **87 Psig** | 10029 | 10029 | 10029 | 10029 | 10029 | 10029 | 10029 | 10029 |
| **102 Psig** | 11035 | 11035 | 11035 | 11035 | 11035 | 11035 | 11035 | 11035 |
| **116 Psig** | 11935 | 11935 | 11935 | 11935 | 11935 | 11935 | 11935 | 11935 |
| **131 Psig** | 15417 | 15417 | 15417 | 15417 | 15417 | 15417 | 15417 | 15417 |
| **145 Psig** | 16957 | 16957 | 16957 | 16957 | 16957 | 16957 | 16957 | 16957 |

*Datos en azul corresponden a toma externa / Values in blue correspond to external impulse

d=0,05 lb/ft$^3$ AC 10

| Ø16 | Pressures (Psig/"WC) vs Flow (SCFH) | | | | | | | |
|---|---|---|---|---|---|---|---|---|
| **Pin / Pout** | **8 "WC** | **12 "WC** | **16 "WC** | **20 "WC** | **24 "WC** | **28 "WC** | **32 "WC** | **40 "WC** |
| **3 Psig** | 3237 | 3161 | 3081 | 2998 | 2910 | 2817 | 2719 | 2504 |
| **4 Psig** | 4005 | 3952 | 3897 | 3839 | 3779 | 3717 | 3652 | 3514 |
| **6 Psig** | 4628 | 4589 | 4548 | 4506 | 4462 | 4416 | 4369 | 4269 |
| **7 Psig** | 5159 | 5130 | 5099 | 5068 | 5034 | 5000 | 4964 | 4889 |
| **11 Psig** | 6232 | 6219 | 6206 | 6191 | 6175 | 6159 | 6142 | 6104 |
| **15 Psig** | 7070 | 7068 | 7065 | 7061 | 7057 | 7052 | 7046 | 7033 |
| **22 Psig** | 11278 | 11278 | 11278 | 11278 | 11278 | 11278 | 11278 | 11278 |
| **29 Psig** | 13521 | 13521 | 13521 | 13521 | 13521 | 13521 | 13521 | 13521 |
| **44 Psig** | 18009 | 18009 | 18009 | 18009 | 18009 | 18009 | 18009 | 18009 |
| **58 Psig** | 22497 | 22497 | 22497 | 22497 | 22497 | 22497 | 22497 | 22497 |
| **73 Psig** | 26985 | 26985 | 26985 | 26985 | 26985 | 26985 | 26985 | 26985 |
| **87 Psig** | 31472 | 31472 | 31472 | 31472 | 31472 | 31472 | 31472 | 31472 |
| **102 Psig** | 35960 | 35960 | 35960 | 35960 | 35960 | 35960 | 35960 | 35960 |
| **116 Psig** | 40448 | 40448 | 40448 | 40448 | 40448 | 40448 | 40448 | 40448 |
| **131 Psig** | 44935 | 44935 | 44935 | 44935 | 44935 | 44935 | 44935 | 44935 |
| **145 Psig** | 0 | 0 | 49423 | 49423 | 49423 | 49423 | 49423 | 49423 |

*Datos en azul corresponden a toma externa / Values in blue correspond to external impulse

d=0,05 lb/ft$^3$ AC 10

DUNGS®
Combustion Controls

**Tablas de caudal / Flow tables (Imperial units)**

| Ø20 | Pressures (Psig/"WC) vs Flow (SCFH) | | | | | | | |
|---|---|---|---|---|---|---|---|---|
| **Pin / Pout** | **8 "WC** | **12 "WC** | **16 "WC** | **20 "WC** | **24 "WC** | **28 "WC** | **32 "WC** | **40 "WC** |
| **3 Psig** | 3901 | 3809 | 3713 | 3612 | 3506 | 3394 | 3276 | 3018 |
| **4 Psig** | 4839 | 4775 | 4708 | 4638 | 4566 | 4490 | 4412 | 4245 |
| **6 Psig** | 5606 | 5558 | 5509 | 5458 | 5404 | 5349 | 5292 | 5170 |
| **7 Psig** | 6266 | 6230 | 6193 | 6154 | 6114 | 6072 | 6029 | 5937 |
| **11 Psig** | 7620 | 7604 | 7587 | 7569 | 7550 | 7530 | 7509 | 7463 |
| **15 Psig** | 8704 | 8702 | 8698 | 8694 | 8688 | 8682 | 8675 | 8658 |
| **22 Psig** | 16216 | 16216 | 16216 | 16216 | 16216 | 16216 | 16216 | 16216 |
| **29 Psig** | 19443 | 19443 | 19443 | 19443 | 19443 | 19443 | 19443 | 19443 |
| **44 Psig** | 25896 | 25896 | 25896 | 25896 | 25896 | 25896 | 25896 | 25896 |
| **58 Psig** | 32349 | 32349 | 32349 | 32349 | 32349 | 32349 | 32349 | 32349 |
| **73 Psig** | 38802 | 38802 | 38802 | 38802 | 38802 | 38802 | 38802 | 38802 |
| **87 Psig** | 45255 | 45255 | 45255 | 45255 | 45255 | 45255 | 45255 | 45255 |
| **102 Psig** | 0 | 0 | 51708 | 51708 | 51708 | 51708 | 51708 | 51708 |
| **116 Psig** | 0 | 0 | 0 | 58161 | 58161 | 58161 | 58161 | 58161 |
| **131 Psig** | 0 | 0 | 0 | 0 | 64614 | 64614 | 64614 | 64614 |
| **145 Psig** | 0 | 0 | 0 | 0 | 0 | 71067 | 71067 | 71067 |

*Datos en azul corresponden a toma externa / Values in blue correspond to external impulse

d=0,05 lb/ft$^3$ AC 10

| Ø25 | Pressures (Psig/"WC) vs Flow (SCFH) | | | | | | | |
|---|---|---|---|---|---|---|---|---|
| **Pin / Pout** | **8 "WC** | **12 "WC** | **16 "WC** | **20 "WC** | **24 "WC** | **28 "WC** | **32 "WC** | **40 "WC** |
| **3 Psig** | 4741 | 4812 | 4690 | 4563 | 4429 | 4287 | 4138 | 3812 |
| **4 Psig** | 5891 | 6041 | 5957 | 5869 | 5777 | 5682 | 5582 | 5371 |
| **6 Psig** | 6838 | 7046 | 6983 | 6918 | 6850 | 6780 | 6708 | 6554 |
| **7 Psig** | 7656 | 7911 | 7864 | 7815 | 7764 | 7711 | 7656 | 7539 |
| **11 Psig** | 9353 | 9700 | 9679 | 9656 | 9631 | 9606 | 9579 | 9521 |
| **15 Psig** | 17252 | 17923 | 17916 | 17907 | 17896 | 17883 | 17869 | 17835 |
| **22 Psig** | 21545 | 22390 | 22390 | 22390 | 22390 | 22390 | 22390 | 22390 |
| **29 Psig** | 25832 | 26845 | 26845 | 26845 | 26845 | 26845 | 26845 | 26845 |
| **44 Psig** | 34405 | 35755 | 35755 | 35755 | 35755 | 35755 | 35755 | 35755 |
| **58 Psig** | 42978 | 44664 | 44664 | 44664 | 44664 | 44664 | 44664 | 44664 |
| **73 Psig** | 51552 | 53574 | 53574 | 53574 | 53574 | 53574 | 53574 | 53574 |
| **87 Psig** | 0 | 0 | 62484 | 62484 | 62484 | 62484 | 62484 | 62484 |
| **102 Psig** | 0 | 0 | 0 | 71393 | 71393 | 71393 | 71393 | 71393 |
| **116 Psig** | 0 | 0 | 0 | 0 | 80303 | 80303 | 80303 | 80303 |
| **131 Psig** | 0 | 0 | 0 | 0 | 0 | 89213 | 89213 | 89213 |
| **145 Psig** | 0 | 0 | 0 | 0 | 0 | 0 | 0 | 0 |

*Datos en azul corresponden a toma externa / Values in blue correspond to external impulse

d=0,05 lb/ft$^3$ AC 10

Plano CAD, no cambiar manualmente!
CAD-Drawing, do not change manually!

This design and/or document is proprietary and protected by copyright.
It may not, without our prior express consent, be copied nor transmitted
to any third party. It must be returned to us upon discharge of the order.

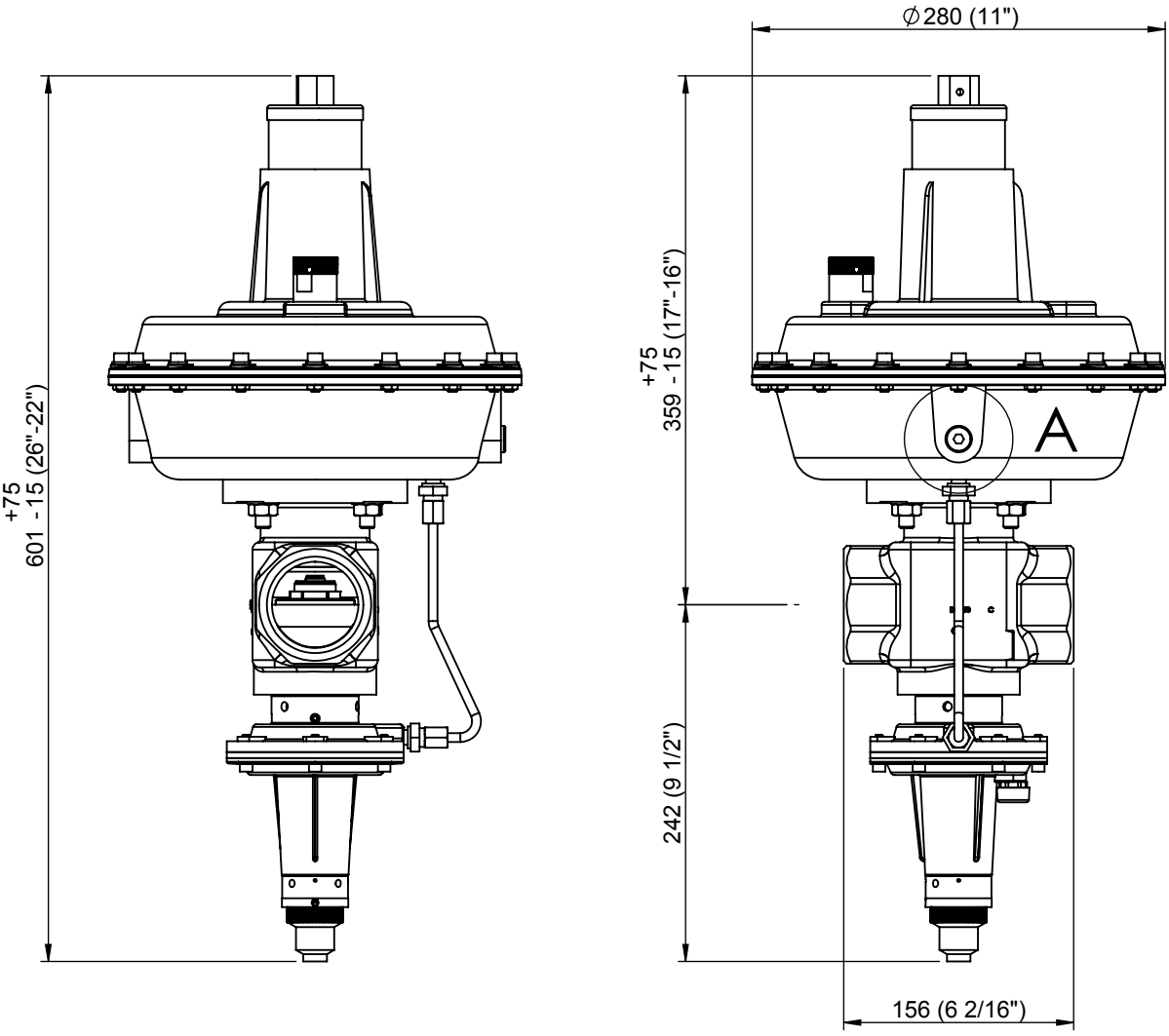


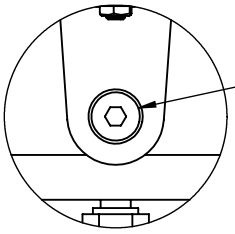


DETALLE A
ESCALA 2 : 5

3D

| Rev | Descripción Modificación | Fecha | Nom |
|---|---|---|---|
| | | | |

**Karl Dungs S.L.U.**
**Combustion Controls**
Avinguda de Can Roqueta, 15 - Pol. Can Roqueta
E-08202 - Sabadell
Barcelona - ESPAÑA

| | Fecha | Nombre | Firmado |
|---|---|---|---|
| Dibujado | 31/10/2018 | A.Rof | |
| Verificado | 31/10/2018 | J.Inglés | |
| Aprobado | 31/10/2018 | GX | |

Tolerancias según ISO 2768
TOLERANCIAS GENERALES ISO 2768-mK
(MEDIUM) TOLERANCIAS LINEALES
Roscas a 6g/6H y longitudes +1.0/-0

Rz 12.5 ( )

Eliminar rebabas y cantos vivos

Escala: 1:5

Material:

Acabado:

Tratamiento:

Peso: 13947.28 gr.

Descripción:
DIMENSIONS FRM-NOC10020ND/MD

| Código Pieza | Rev. | Formato | Pág. |
|---|---|---|---|
| FRM-NOC10020ND_MD | 0 | A4 | 1 de 1 |

Dimensiones en mm (inch)

Queda prohibida la preproducción total o parcial de este documento
y del contenido del mismo sin la autorización escrita de Karl Dungs S.L.U.
Todos los derechos reservados.

## ESPECIFICACIONES TÉCNICAS / TECHNICAL SPECIFICATION

DUNGS®
Combustion Controls

Regulador de presión con válvula de seguridad, conforme a las normas EN-334 y EN-14382 /
Pressure regulator with safety shut-off valve, in accordance with the standards EN-334 and EN-14382

| | |
|---|---|
| Presión de operación / Operating pressure | Max. 10 Bar / 1000 kPa / 145 Psig |
| Rango de presión de salida FRM / Outlet pressure range FRM | Ver tabla de Selección / See Set point Table |
| Temperatura máxima ambiental / Ambient maximum temperature | 60 ºC / 145ºF |
| Temperatura minima ambiental / Ambient minimum temperature | -20 ºC / -10 ºF |
| Fluido / Flow | Gas Natural, GLP / Natural Gas, LPG |
| Posición de montaje / Mounting Position | *Puede variar el tarado para presiones inferiores a 300 mbar / for pressures below 300 mbar setpoint can be altered |
| Tipo de Construcción / Construction Type: | DS (De resistencia diferencial) / DS (Diferential strenght) |
| Materiales / Materials — Cuerpo / Body | Hierro fundido / Cast iron EN GJS 500-7 or EN GJS 400-15 |
| Actuador / Actuator | Aluminio / Aluminium |
| Membranas / Membranes | NBR EN549 conform |
| Diametro Nominal / Nominal Diameter | Rosca 2" BSP o NPT / Thread 2" BSP or NPT |

| Codigo de producto / Product's code | BSP / SAV | BSP | NPT / SAV | NPT |
|---|---|---|---|---|
| | 279051 | 279065 | 280233 | 280245 |

Producto diseñado acorde a las normas EN-334 y EN-14382 / Product designed in accordance to EN-334 and EN-14382
Categoría III (Regulador) y IV (Válvula de seguridad) acorde a PED 2014/68/UE & CRN B51.14 pendiente
Product category III (Regulator) and IV (Safety valve) according to PED 2014/68/UE & CRN B51.14 pending

| Muelle de regulación / Regulation spring | | | | | | | | | | | |
|---|---|---|---|---|---|---|---|---|---|---|---|
| Ø hilo / wire | Rango / Range (min-Max) | | | | | | | | | Color/Color | codigo/code |
| 5,5 | 80 | 150 | (mbar) | 8 | 15 | (kPa) | 30 | 2,2 | ("WC) | rosa/pink | 287288 |
| 6 | 130 | 250 | (mbar) | 13 | 25 | (kPa) | 1,9 | 3,6 | (psig) | verde/green | 287289 |
| 7 | 200 | 350 | (mbar) | 20 | 35 | (kPa) | 2,9 | 5,1 | (psig) | azul/blue | 287290 |
| 8 | 300 | 400 | (mbar) | 30 | 40 | (kPa) | 4,4 | 5,8 | (psig) | negro/black | 287291 |

| Muelle de mínima presión / Under pressure spring (UPSO) | | | | | | | | | | | |
|---|---|---|---|---|---|---|---|---|---|---|---|
| Ø hilo / wire | Rango / Range (min-Max) | | | | | | | | | Color/Color | codigo/code |
| 2 | 35 | 110 | (mbar) | 3,5 | 11 | (kPa) | 10 | 40 | ("WC) | azul/blue | 270176 |
| 2,3 | 50 | 250 | (mbar) | 5 | 25 | (kPa) | 20 | 3,6 | ("WC) | negro/black | 270177 |
| 2,5 | 80 | 400 | (mbar) | 8 | 40 | (kPa) | 30 | 5,8 | ("WC) | lila/purple | 270178 |

| Muelle de máxima presión / Over pressure spring (OPSO) | | | | | | | | | | | |
|---|---|---|---|---|---|---|---|---|---|---|---|
| Ø hilo / wire | Rango / Range (min-Max) | | | | | | | | | Color/Color | codigo/code |
| 2,5 | 180 | 290 | (mbar) | 18 | 29 | (kPa) | 2,6 | 4,2 | (psig) | verde/green | 270182 |
| 2,75 | 230 | 370 | (mbar) | 23 | 37 | (kPa) | 3,3 | 5,4 | (psig) | rojo/red | 270183 |
| 3,25 | 300 | 500 | (mbar) | 30 | 50 | (kPa) | 4,4 | 7,3 | (psig) | amarillo/yellow | 270184 |
| 3,5 | 400 | 800 | (mbar) | 40 | 80 | (kPa) | 5,8 | 11,6 | (psig) | azul/blue | 270185 |

| Orificios / Orifices | | | | | | |
|---|---|---|---|---|---|---|
| Medida/size | Ø10 | Ø12 | Ø16 | Ø20 | Ø25 | |
| $P_{umax}$* (bar/psig) | 10 / 145 | 10 / 145 | 10 / 145 | 10 / 145 | 9 / 130,5 | |

*Máxima presión de entrada / Maximum inlet pressure

Regulador de gas para media presión / Gas regulator for medium pressure
**FRM-NOC 10020 MD / SAV MD**

DUNGS®
Combustion Controls

**Tablas de caudal / Flow tables (SI units)**

| Ø10 | Pressures (Bar) vs Flow ($Nm^3/h$) | | | | | | | |
|---|---|---|---|---|---|---|---|---|
| **Pin / Pout** | **0,08** | **0,1** | **0,15** | **0,2** | **0,25** | **0,3** | **0,35** | **0,4** |
| **0,2** | 41 | 38 | 27 | - | - | - | - | - |
| **0,3** | 55 | 53 | 47 | 39 | 28 | - | - | - |
| **0,4** | 67 | 65 | 61 | 56 | 49 | 41 | 29 | - |
| **0,5** | 77 | 75 | 72 | 68 | 63 | 58 | 51 | 42 |
| **0,75** | 97 | 96 | 94 | 92 | 90 | 87 | 83 | 79 |
| **1** | 113 | 113 | 112 | 111 | 110 | 108 | 106 | 104 |
| **1,5** | 142 | 142 | 142 | 142 | 142 | 142 | 141 | 141 |
| **2** | 170 | 170 | 170 | 170 | 170 | 170 | 170 | 170 |
| **3** | 227 | 227 | 227 | 227 | 227 | 227 | 227 | 227 |
| **4** | 283 | 283 | 283 | 283 | 283 | 283 | 283 | 283 |
| **5** | 340 | 340 | 340 | 340 | 340 | 340 | 340 | 340 |
| **6** | 396 | 396 | 396 | 396 | 396 | 396 | 396 | 396 |
| **7** | 453 | 453 | 453 | 453 | 453 | 453 | 453 | 453 |
| **8** | 509 | 509 | 509 | 509 | 509 | 509 | 509 | 509 |
| **9** | 566 | 566 | 566 | 566 | 566 | 566 | 566 | 566 |
| **10** | 622 | 622 | 622 | 622 | 622 | 622 | 622 | 622 |

*Datos en azul corresponden a toma externa / Values in blue correspond to external impulse

d=0,83 $Kg/m^3$ AC 10

| Ø16 | Pressures (Bar) vs Flow ($Nm^3/h$) | | | | | | | |
|---|---|---|---|---|---|---|---|---|
| **Pin / Pout** | **0,08** | **0,1** | **0,15** | **0,2** | **0,25** | **0,3** | **0,35** | **0,4** |
| **0,2** | 101 | 93 | 66 | - | - | - | - | - |
| **0,3** | 137 | 132 | 114 | 93 | 67 | - | - | - |
| **0,4** | 165 | 162 | 147 | 132 | 115 | 95 | 68 | - |
| **0,5** | 189 | 186 | 174 | 162 | 149 | 135 | 118 | 98 |
| **0,75** | 239 | 238 | 228 | 219 | 210 | 202 | 193 | 183 |
| **1** | 280 | 279 | 271 | 263 | 257 | 251 | 245 | 239 |
| **1,5** | 350 | 350 | 342 | 335 | 331 | 328 | 326 | 323 |
| **2** | 419 | 419 | 410 | 401 | 397 | 393 | 391 | 390 |
| **3** | 556 | 556 | 544 | 533 | 526 | 522 | 519 | 517 |
| **4** | 692 | 692 | 677 | 663 | 655 | 650 | 646 | 644 |
| **5** | 827 | 827 | 809 | 792 | 783 | 777 | 772 | 769 |
| **6** | 961 | 961 | 940 | 921 | 910 | 903 | 898 | 894 |
| **7** | 1094 | 1094 | 1070 | 1048 | 1036 | 1028 | 1022 | 1017 |
| **8** | 1226 | 1226 | 1199 | 1175 | 1161 | 1152 | 1145 | 1140 |
| **9** | 1357 | 1357 | 1327 | 1300 | 1285 | 1275 | 1267 | 1262 |
| **10** | 0 | 0 | 1454 | 1425 | 1408 | 1397 | 1389 | 1383 |

*Datos en azul corresponden a toma externa / Values in blue correspond to external impulse

d=0,83 $Kg/m^3$ AC 10

DUNGS®
Combustion Controls

**Tablas de caudal / Flow tables (SI units)**

| Ø20 | Pressures (Bar) vs Flow ($Nm^3/h$) | | | | | | | |
|---|---|---|---|---|---|---|---|---|
| **Pin / Pout** | **0,08** | **0,1** | **0,15** | **0,2** | **0,25** | **0,3** | **0,35** | **0,4** |
| **0,2** | 127 | 113 | 78 | - | - | - | - | - |
| **0,3** | 171 | 159 | 135 | 110 | 79 | - | - | - |
| **0,4** | 205 | 194 | 173 | 155 | 135 | 112 | 80 | - |
| **0,5** | 233 | 222 | 204 | 189 | 174 | 157 | 138 | 114 |
| **0,75** | 291 | 280 | 264 | 253 | 243 | 233 | 223 | 211 |
| **1** | 337 | 325 | 310 | 301 | 293 | 287 | 280 | 273 |
| **1,5** | 411 | 397 | 381 | 373 | 369 | 366 | 363 | 360 |
| **2** | 479 | 464 | 444 | 435 | 430 | 427 | 424 | 423 |
| **3** | 602 | 583 | 559 | 548 | 541 | 537 | 534 | 532 |
| **4** | 885 | 857 | 821 | 805 | 795 | 789 | 785 | 781 |
| **5** | 1062 | 1028 | 985 | 965 | 954 | 946 | 941 | 937 |
| **6** | 1238 | 1199 | 1149 | 1126 | 1113 | 1104 | 1098 | 1093 |
| **7** | 0 | 0 | 1313 | 1287 | 1271 | 1261 | 1254 | 1249 |
| **8** | 0 | 0 | 0 | 1447 | 1430 | 1419 | 1411 | 1405 |
| **9** | 0 | 0 | 0 | 0 | 1588 | 1576 | 1567 | 1560 |
| **10** | 0 | 0 | 0 | 0 | 0 | 1733 | 1724 | 1716 |

*Datos en azul corresponden a toma externa / Values in blue correspond to external impulse

d=0,83 $Kg/m^3$ AC 10

| Ø25 | Pressures (Bar) vs Flow ($Nm^3/h$) | | | | | | | |
|---|---|---|---|---|---|---|---|---|
| **Pin / Pout** | **0,08** | **0,1** | **0,15** | **0,2** | **0,25** | **0,3** | **0,35** | **0,4** |
| **0,2** | 132 | 118 | 82 | - | - | - | - | - |
| **0,3** | 178 | 165 | 140 | 115 | 82 | - | - | - |
| **0,4** | 213 | 201 | 180 | 161 | 141 | 116 | 83 | - |
| **0,5** | 242 | 231 | 211 | 196 | 180 | 163 | 143 | 119 |
| **0,75** | 300 | 289 | 272 | 261 | 251 | 240 | 230 | 218 |
| **1** | 346 | 334 | 318 | 309 | 301 | 295 | 288 | 280 |
| **1,5** | 417 | 404 | 387 | 380 | 375 | 372 | 369 | 366 |
| **2** | 581 | 562 | 539 | 528 | 522 | 518 | 515 | 512 |
| **3** | 773 | 749 | 718 | 703 | 695 | 689 | 685 | 683 |
| **4** | 966 | 935 | 897 | 878 | 868 | 861 | 856 | 853 |
| **5** | 1159 | 1122 | 1075 | 1054 | 1041 | 1033 | 1027 | 1023 |
| **6** | 0 | 0 | 1254 | 1229 | 1214 | 1205 | 1198 | 1193 |
| **7** | 0 | 0 | 0 | 1404 | 1387 | 1376 | 1369 | 1363 |
| **8** | 0 | 0 | 0 | 0 | 1561 | 1548 | 1540 | 1533 |
| **9** | 0 | 0 | 0 | 0 | 0 | 1720 | 1710 | 1703 |
| **10** | 0 | 0 | 0 | 0 | 0 | 0 | 0 | 0 |

*Datos en azul corresponden a toma externa / Values in blue correspond to external impulse

d=0,83 $Kg/m^3$ AC 10

DUNGS®
Combustion Controls

**Tablas de caudal / Flow tables (Imperial units)**

| Ø10 | Pressures (Psig/"WC) vs Flow (SCFH) | | | | | | | |
|---|---|---|---|---|---|---|---|---|
| **Pin / Pout** | **32 "WC** | **40 "WC** | **60 "WC** | **80 "WC** | **100 "WC** | **121 "WC** | **141 "WC** | **161 "WC** |
| **3 Psig** | 1445 | 1331 | 962 | - | - | - | - | - |
| **4 Psig** | 1957 | 1883 | 1667 | 1390 | 1003 | - | - | - |
| **6 Psig** | 2360 | 2306 | 2152 | 1965 | 1737 | 1446 | 1042 | - |
| **7 Psig** | 2703 | 2662 | 2546 | 2407 | 2242 | 2045 | 1804 | 1500 |
| **11 Psig** | 3415 | 3394 | 3333 | 3259 | 3171 | 3067 | 2946 | 2806 |
| **15 Psig** | 4001 | 3994 | 3967 | 3931 | 3883 | 3825 | 3756 | 3674 |
| **22 Psig** | 5014 | 5014 | 5014 | 5014 | 5014 | 5009 | 4996 | 4975 |
| **29 Psig** | 6011 | 6011 | 6011 | 6011 | 6011 | 6011 | 6011 | 6011 |
| **44 Psig** | 8006 | 8006 | 8006 | 8006 | 8006 | 8006 | 8006 | 8006 |
| **58 Psig** | 10001 | 10001 | 10001 | 10001 | 10001 | 10001 | 10001 | 10001 |
| **73 Psig** | 11996 | 11996 | 11996 | 11996 | 11996 | 11996 | 11996 | 11996 |
| **87 Psig** | 13991 | 13991 | 13991 | 13991 | 13991 | 13991 | 13991 | 13991 |
| **102 Psig** | 15986 | 15986 | 15986 | 15986 | 15986 | 15986 | 15986 | 15986 |
| **116 Psig** | 17981 | 17981 | 17981 | 17981 | 17981 | 17981 | 17981 | 17981 |
| **131 Psig** | 19976 | 19976 | 19976 | 19976 | 19976 | 19976 | 19976 | 19976 |
| **145 Psig** | 21972 | 21972 | 21972 | 21972 | 21972 | 21972 | 21972 | 21972 |

*Datos en azul corresponden a toma externa / Values in blue correspond to external impulse

d=0,05 lb/ft$^3$ AC 10

| Ø16 | Pressures (Psig/"WC) vs Flow (SCFH) | | | | | | | |
|---|---|---|---|---|---|---|---|---|
| **Pin / Pout** | **32 "WC** | **40 "WC** | **60 "WC** | **80 "WC** | **100 "WC** | **121 "WC** | **141 "WC** | **161 "WC** |
| **3 Psig** | 3578 | 3296 | 2330 | - | - | - | - | - |
| **4 Psig** | 4843 | 4660 | 4035 | 3297 | 2350 | - | - | - |
| **6 Psig** | 5839 | 5705 | 5207 | 4661 | 4069 | 3361 | 2408 | - |
| **7 Psig** | 6687 | 6585 | 6159 | 5706 | 5252 | 4751 | 4169 | 3451 |
| **11 Psig** | 8438 | 8387 | 8057 | 7719 | 7420 | 7121 | 6802 | 6451 |
| **15 Psig** | 9879 | 9860 | 9581 | 9301 | 9080 | 8873 | 8663 | 8438 |
| **22 Psig** | 12356 | 12356 | 12086 | 11843 | 11701 | 11597 | 11502 | 11405 |
| **29 Psig** | 14788 | 14788 | 14465 | 14173 | 14004 | 13893 | 13815 | 13757 |
| **44 Psig** | 19626 | 19626 | 19197 | 18809 | 18585 | 18437 | 18334 | 18257 |
| **58 Psig** | 24428 | 24428 | 23894 | 23412 | 23132 | 22949 | 22820 | 22724 |
| **73 Psig** | 29194 | 29194 | 28556 | 27980 | 27646 | 27427 | 27273 | 27158 |
| **87 Psig** | 33926 | 33926 | 33184 | 32515 | 32126 | 31872 | 31693 | 31560 |
| **102 Psig** | 38622 | 38622 | 37778 | 37016 | 36573 | 36284 | 36080 | 35928 |
| **116 Psig** | 43283 | 43283 | 42337 | 41483 | 40986 | 40662 | 40434 | 40264 |
| **131 Psig** | 47908 | 47908 | 46861 | 45916 | 45367 | 45008 | 44755 | 44567 |
| **145 Psig** | 0 | 0 | 51351 | 50315 | 49713 | 49320 | 49043 | 48837 |

*Datos en azul corresponden a toma externa / Values in blue correspond to external impulse

d=0,05 lb/ft$^3$ AC 10

DUNGS®
Combustion Controls

**Tablas de caudal / Flow tables (Imperial units)**

| Ø20 | Pressures (Psig/"WC) vs Flow (SCFH) | | | | | | | |
|---|---|---|---|---|---|---|---|---|
| **Pin / Pout** | **32 "WC** | **40 "WC** | **60 "WC** | **80 "WC** | **100 "WC** | **121 "WC** | **141 "WC** | **161 "WC** |
| **3 Psig** | 4473 | 3988 | 2764 | - | - | - | - | - |
| **4 Psig** | 6026 | 5611 | 4763 | 3891 | 2774 | - | - | - |
| **6 Psig** | 7231 | 6837 | 6118 | 5475 | 4781 | 3948 | 2829 | - |
| **7 Psig** | 8242 | 7855 | 7201 | 6672 | 6140 | 5555 | 4874 | 4035 |
| **11 Psig** | 10276 | 9884 | 9308 | 8917 | 8572 | 8226 | 7857 | 7452 |
| **15 Psig** | 11884 | 11479 | 10934 | 10615 | 10362 | 10126 | 9886 | 9630 |
| **22 Psig** | 14498 | 14031 | 13453 | 13182 | 13024 | 12908 | 12802 | 12695 |
| **29 Psig** | 16912 | 16367 | 15693 | 15377 | 15193 | 15072 | 14988 | 14925 |
| **44 Psig** | 21270 | 20585 | 19737 | 19339 | 19108 | 18957 | 18850 | 18771 |
| **58 Psig** | 31259 | 30252 | 29007 | 28421 | 28081 | 27859 | 27703 | 27586 |
| **73 Psig** | 37495 | 36287 | 34793 | 34091 | 33683 | 33417 | 33229 | 33089 |
| **87 Psig** | 43731 | 42322 | 40579 | 39760 | 39285 | 38974 | 38755 | 38592 |
| **102 Psig** | 0 | 0 | 46365 | 45430 | 44886 | 44531 | 44281 | 44095 |
| **116 Psig** | 0 | 0 | 0 | 51099 | 50488 | 50089 | 49807 | 49598 |
| **131 Psig** | 0 | 0 | 0 | 0 | 56090 | 55646 | 55333 | 55101 |
| **145 Psig** | 0 | 0 | 0 | 0 | 0 | 61204 | 60860 | 60604 |

*Datos en azul corresponden a toma externa / Values in blue correspond to external impulse

d=0,05 lb/ft$^3$ AC 10

| Ø25 | Pressures (Psig/"WC) vs Flow (SCFH) | | | | | | | |
|---|---|---|---|---|---|---|---|---|
| **Pin / Pout** | **32 "WC** | **40 "WC** | **60 "WC** | **80 "WC** | **100 "WC** | **121 "WC** | **141 "WC** | **161 "WC** |
| **3 Psig** | 4664 | 4158 | 2882 | - | - | - | - | - |
| **4 Psig** | 6272 | 5840 | 4957 | 4050 | 2887 | - | - | - |
| **6 Psig** | 7512 | 7103 | 6355 | 5688 | 4966 | 4102 | 2939 | - |
| **7 Psig** | 8546 | 8145 | 7468 | 6918 | 6367 | 5761 | 5054 | 4184 |
| **11 Psig** | 10606 | 10202 | 9607 | 9204 | 8847 | 8490 | 8110 | 7691 |
| **15 Psig** | 12207 | 11791 | 11231 | 10903 | 10643 | 10401 | 10154 | 9891 |
| **22 Psig** | 14742 | 14267 | 13679 | 13403 | 13243 | 13125 | 13017 | 12908 |
| **29 Psig** | 20506 | 19845 | 19028 | 18644 | 18421 | 18276 | 18173 | 18097 |
| **44 Psig** | 27312 | 26432 | 25344 | 24832 | 24535 | 24341 | 24204 | 24103 |
| **58 Psig** | 34118 | 33019 | 31659 | 31020 | 30649 | 30407 | 30236 | 30109 |
| **73 Psig** | 40924 | 39605 | 37974 | 37208 | 36763 | 36472 | 36267 | 36115 |
| **87 Psig** | 0 | 0 | 44290 | 43396 | 42877 | 42538 | 42299 | 42121 |
| **102 Psig** | 0 | 0 | 0 | 49584 | 48991 | 48603 | 48330 | 48127 |
| **116 Psig** | 0 | 0 | 0 | 0 | 55105 | 54669 | 54362 | 54134 |
| **131 Psig** | 0 | 0 | 0 | 0 | 0 | 60734 | 60393 | 60140 |
| **145 Psig** | 0 | 0 | 0 | 0 | 0 | 0 | 0 | 0 |

*Datos en azul corresponden a toma externa / Values in blue correspond to external impulse

d=0,05 lb/ft$^3$ AC 10

Plano CAD, no cambiar manualmente!
CAD-Drawing, do not change manually!

This design and/or document is proprietary and protected by copyright.
It may not, without our prior express consent, be copied nor transmitted
to any third party. It must be returned to us upon discharge of the order.

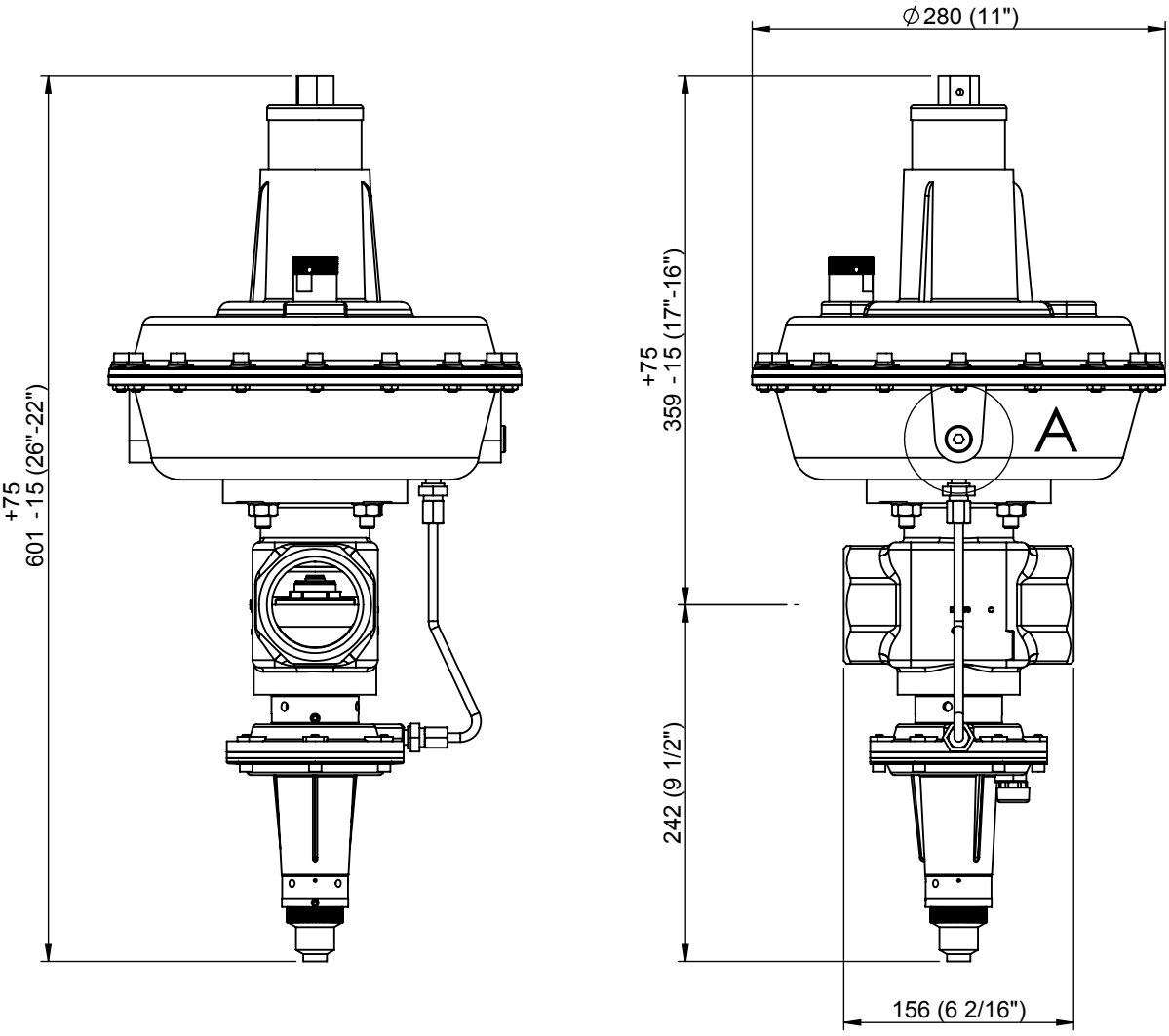


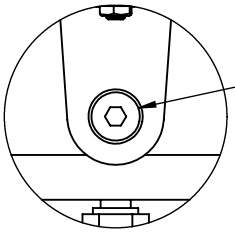


DETALLE A
ESCALA 2 : 5

3D

| Rev | Descripción Modificación | Fecha | Nom |
|---|---|---|---|
| | | | |

**Karl Dungs S.L.U.**
**Combustion Controls**
Avinguda de Can Roqueta, 15 - Pol. Can Roqueta
E-08202 - Sabadell
Barcelona - ESPAÑA

| | Fecha | Nombre | Firmado |
|---|---|---|---|
| Dibujado | 31/10/2018 | A.Rof | |
| Verificado | 31/10/2018 | J.Inglés | |
| Aprobado | 31/10/2018 | GX | |

Tolerancias según ISO 2768
TOLERANCIAS GENERALES ISO 2768-mK
(MEDIUM) TOLERANCIAS LINEALES
Roscas a 6g/6H y longitudes +1.0/-0

Rz 12.5 ( )

Eliminar rebabas y cantos vivos

Escala: 1:5

Material:

Acabado:

Tratamiento:

Peso: 13947.28 gr.

Descripción:
DIMENSIONS FRM-NOC10020ND/MD

| Código Pieza | Rev. | Formato | Pág. |
|---|---|---|---|
| FRM-NOC10020ND_MD | 0 | A4 | 1 de 1 |

Dimensiones en mm (inch)

Queda prohibida la preproducción total o parcial de este documento
y del contenido del mismo sin la autorización escrita de Karl Dungs S.L.U.
Todos los derechos reservados.

## ESPECIFICACIONES TÉCNICAS / TECHNICAL SPECIFICATION

DUNGS®
Combustion Controls

Regulador de presión con válvula de seguridad, conforme a las normas EN-334 y EN-14382 /
Pressure regulator with safety shut-off valve, in accordance with the standards EN-334 and EN-14382

| | |
|---|---|
| Presión de operación / Operating pressure | Max. 10 Bar / 1000 kPa / 145 Psig |
| Rango de presión de salida FRM / Outlet pressure range FRM | Ver tabla de Selección / See Set point Table |
| Temperatura máxima ambiental / Ambient maximum temperature | 60 ºC / 145ºF |
| Temperatura minima ambiental / Ambient minimum temperature | -20 ºC / -10 ºF |
| Fluido / Flow | Gas Natural, GLP / Natural Gas, LPG |
| Posición de montaje / Mounting Position | 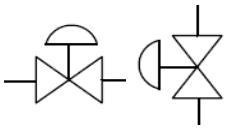 *Puede variar el tarado para presiones inferiores a 300 mbar / for pressures below 300 mbar setpoint can be altered |
| Tipo de Construcción / Construction Type: | DS (De resistencia diferencial) / DS (Diferential strenght) |
| Materiales / Materials — Cuerpo / Body | Hierro fundido / Cast iron EN GJS 500-7 or EN GJS 400-15 |
| Actuador / Actuator | Aluminio / Aluminium |
| Membranas / Membranes | NBR EN549 conform |
| Diametro Nominal / Nominal Diameter | Rosca 2" BSP o NPT / Thread 1" BSP or NPT |

| | BSP / SAV | BSP | NPT / SAV | NPT |
|---|---|---|---|---|
| Codigo de producto / Product's code | 279052 | 279066 | 280234 | 280246 |

Producto diseñado acorde a las normas EN-334 y EN-14382 / Product designed in accordance to EN-334 and EN-14382
Categoría III (Regulador) y IV (Válvula de seguridad) acorde a PED 2014/68/UE & CRN B51.14 pendiente
Product category III (Regulator) and IV (Safety valve) according to PED 2014/68/UE & CRN B51.14 pending

| Muelle de regulación / Regulation spring | | | | | | | | | | | |
|---|---|---|---|---|---|---|---|---|---|---|---|
| Ø hilo / wire | Rango / Range (min-Max) | | | | | | | | | Color/Color | codigo/code |
| 4,5 | 300 | 500 | (mbar) | 30 | 50 | (kPa) | 4,4 | 7,3 | (psig) | blanco/white | 286355 |
| 5 | 450 | 700 | (mbar) | 45 | 70 | (kPa) | 6,5 | 10,2 | (psig) | amarillo/yellow | 286356 |
| 5,5 | 550 | 900 | (mbar) | 55 | 90 | (kPa) | 8 | 13,1 | (psig) | azul/blue | 286357 |
| 6 | 650 | 1150 | (mbar) | 65 | 115 | (kPa) | 9,4 | 16,7 | (psig) | negro/black | 286358 |
| 6,5 | 1000 | 1500 | (mbar) | 100 | 150 | (kPa) | 14,5 | 21,8 | (psig) | lila/purple | 286359 |

| Muelle de mínima presión / Under pressure spring (UPSO) | | | | | | | | | | | |
|---|---|---|---|---|---|---|---|---|---|---|---|
| Ø hilo / wire | Rango / Range (min-Max) | | | | | | | | | Color/Color | codigo/code |
| 2,5 | 150 | 500 | (mbar) | 15 | 50 | (kPa) | 2,2 | 7,3 | (psig) | lila/purple | 270178 |
| 2,8 | 300 | 1000 | (mbar) | 30 | 100 | (kPa) | 4,4 | 14,5 | (psig) | naranja/orange | 270179 |
| 3 | 800 | 1400 | (mbar) | 80 | 140 | (kPa) | 11,6 | 20,3 | (psig) | plata/silver | 270180 |

| Muelle de máxima presión / Over pressure spring (OPSO) | | | | | | | | | | | |
|---|---|---|---|---|---|---|---|---|---|---|---|
| Ø hilo / wire | Rango / Range (min-Max) | | | | | | | | | Color/Color | codigo/code |
| 3,5 | 500 | 1000 | (mbar) | 50 | 100 | (kPa) | 7,3 | 14,5 | (psig) | azul/blue | 270185 |
| 3,75 | 700 | 1300 | (mbar) | 70 | 130 | (kPa) | 10,2 | 18,9 | (psig) | negro/black | 270186 |
| 4 | 1000 | 1800 | (mbar) | 100 | 180 | (kPa) | 14,5 | 26,1 | (psig) | lila/purple | 270187 |
| 4,5 | 1300 | 2500 | (mbar) | 130 | 250 | (kPa) | 18,9 | 36,3 | (psig) | naranja/orange | 270188 |
| 4,8 | 1800 | 3500 | (mbar) | 180 | 350 | (kPa) | 26,1 | 50,8 | (psig) | rosa/pink | 270189 |

| Orificios / Orifices | | | | | | | | | | |
|---|---|---|---|---|---|---|---|---|---|---|
| Medida/size | Ø10 | | Ø12 | | Ø16 | | Ø25 | | | |
| $P_{umax}$* (bar/psig) | 10 | 145 | 10 | 145 | 10 | 145 | 10 | 145 | | |

*Máxima presión de entrada / Maximum inlet pressure

Regulador de gas para media presión / Gas regulator for medium pressure

**FRM-NOC 10020 HD / SAV HD**

DUNGS® Combustion Controls

**Tablas de caudal / Flow tables (SI units)**

| Ø10 | Pressures (Bar) vs Flow ($Nm^3/h$) | | | | | | | |
|---|---|---|---|---|---|---|---|---|
| **Pin / Pout** | **0,3** | **0,4** | **0,5** | **0,7** | **0,9** | **1,1** | **1,3** | **1,5** |
| **0,2** | - | - | - | - | - | - | - | - |
| **0,3** | - | - | - | - | - | - | - | - |
| **0,4** | 40 | - | - | - | - | - | - | - |
| **0,5** | 57 | 42 | - | - | - | - | - | - |
| **0,75** | 85 | 78 | 68 | 32 | - | - | - | - |
| **1** | 106 | 102 | 97 | 80 | 49 | - | - | - |
| **1,5** | 139 | 138 | 137 | 130 | 119 | 102 | 75 | - |
| **2** | 167 | 167 | 167 | 166 | 161 | 153 | 141 | 124 |
| **3** | 223 | 223 | 223 | 223 | 223 | 222 | 219 | 214 |
| **4** | 278 | 278 | 278 | 278 | 278 | 278 | 277 | 277 |
| **5** | 334 | 334 | 334 | 334 | 334 | 334 | 333 | 332 |
| **6** | 389 | 389 | 389 | 389 | 389 | 389 | 388 | 387 |
| **7** | 445 | 445 | 445 | 445 | 445 | 445 | 443 | 442 |
| **8** | 500 | 500 | 500 | 500 | 500 | 500 | 499 | 497 |
| **9** | 556 | 556 | 556 | 556 | 556 | 556 | 554 | 552 |
| **10** | 611 | 611 | 611 | 611 | 611 | 611 | 609 | 608 |

*Datos en azul corresponden a toma externa / Values in blue correspond to external impulse

d=0,83 $Kg/m^3$ AC 10

| Ø16 | Pressures (Bar) vs Flow ($Nm^3/h$) | | | | | | | |
|---|---|---|---|---|---|---|---|---|
| **Pin / Pout** | **0,3** | **0,4** | **0,5** | **0,7** | **0,9** | **1,1** | **1,3** | **1,5** |
| **0,2** | - | - | - | - | - | - | - | - |
| **0,3** | - | - | - | - | - | - | - | - |
| **0,4** | 69 | - | - | - | - | - | - | - |
| **0,5** | 97 | 70 | - | - | - | - | - | - |
| **0,75** | 146 | 131 | 113 | 53 | - | - | - | - |
| **1** | 182 | 171 | 159 | 129 | 78 | - | - | - |
| **1,5** | 238 | 232 | 225 | 211 | 192 | 164 | 121 | - |
| **2** | 286 | 280 | 276 | 269 | 260 | 246 | 226 | 198 |
| **3** | 381 | 373 | 368 | 362 | 359 | 357 | 352 | 344 |
| **4** | 476 | 466 | 459 | 453 | 449 | 447 | 445 | 444 |
| **5** | 571 | 558 | 551 | 543 | 538 | 536 | 534 | 532 |
| **6** | 666 | 651 | 643 | 633 | 628 | 625 | 622 | 621 |
| **7** | 761 | 744 | 734 | 723 | 718 | 714 | 711 | 709 |
| **8** | 856 | 837 | 826 | 814 | 807 | 803 | 800 | 798 |
| **9** | 951 | 930 | 918 | 904 | 897 | 892 | 889 | 886 |
| **10** | 1046 | 1023 | 1009 | 994 | 986 | 981 | 978 | 975 |

*Datos en azul corresponden a toma externa / Values in blue correspond to external impulse

d=0,83 $Kg/m^3$ AC 10

DUNGS®
Combustion Controls

**Tablas de caudal / Flow tables (SI units)**

| Ø20 | Pressures (Bar) vs Flow ($Nm^3/h$) | | | | | | | |
|---|---|---|---|---|---|---|---|---|
| **Pin / Pout** | **0,3** | **0,4** | **0,5** | **0,7** | **0,9** | **1,1** | **1,3** | **1,5** |
| **0,2** | - | - | - | - | - | - | - | - |
| **0,3** | - | - | - | - | - | - | - | - |
| **0,4** | 80 | - | - | - | - | - | - | - |
| **0,5** | 114 | 82 | - | - | - | - | - | - |
| **0,75** | 171 | 153 | 132 | 62 | - | - | - | - |
| **1** | 213 | 200 | 186 | 151 | 91 | - | - | - |
| **1,5** | 278 | 270 | 263 | 247 | 224 | 191 | 141 | - |
| **2** | 334 | 327 | 322 | 315 | 303 | 287 | 264 | 232 |
| **3** | 445 | 435 | 429 | 423 | 420 | 417 | 411 | 401 |
| **4** | 556 | 544 | 536 | 528 | 524 | 521 | 520 | 518 |
| **5** | 667 | 652 | 643 | 634 | 629 | 625 | 623 | 622 |
| **6** | 778 | 761 | 751 | 739 | 733 | 729 | 727 | 725 |
| **7** | 889 | 869 | 858 | 845 | 838 | 834 | 831 | 828 |
| **8** | 1000 | 977 | 965 | 950 | 942 | 938 | 934 | 932 |
| **9** | 1111 | 1086 | 1072 | 1056 | 1047 | 1042 | 1038 | 1035 |
| **10** | 1222 | 1194 | 1179 | 1161 | 1152 | 1146 | 1141 | 1138 |

*Datos en azul corresponden a toma externa / Values in blue correspond to external impulse

d=0,83 $Kg/m^3$ AC 10

| Ø25 | Pressures (Bar) vs Flow ($Nm^3/h$) | | | | | | | |
|---|---|---|---|---|---|---|---|---|
| **Pin / Pout** | **0,3** | **0,4** | **0,5** | **0,7** | **0,9** | **1,1** | **1,3** | **1,5** |
| **0,2** | - | - | - | - | - | - | - | - |
| **0,3** | - | - | - | - | - | - | - | - |
| **0,4** | 93 | - | - | - | - | - | - | - |
| **0,5** | 131 | 94 | - | - | - | - | - | - |
| **0,75** | 195 | 175 | 151 | 71 | - | - | - | - |
| **1** | 241 | 227 | 211 | 171 | 104 | - | - | - |
| **1,5** | 311 | 302 | 294 | 275 | 250 | 213 | 157 | - |
| **2** | 366 | 358 | 353 | 345 | 333 | 314 | 289 | 254 |
| **3** | 471 | 460 | 454 | 447 | 444 | 441 | 435 | 425 |
| **4** | 567 | 554 | 547 | 539 | 534 | 531 | 530 | 528 |
| **5** | 654 | 640 | 631 | 622 | 617 | 613 | 611 | 610 |
| **6** | 733 | 717 | 707 | 697 | 691 | 687 | 685 | 683 |
| **7** | 0 | 0 | 957 | 943 | 935 | 930 | 927 | 924 |
| **8** | 0 | 0 | 0 | 1060 | 1051 | 1046 | 1042 | 1040 |
| **9** | 0 | 0 | 0 | 0 | 1168 | 1162 | 1158 | 1155 |
| **10** | 0 | 0 | 0 | 0 | 0 | 1278 | 1274 | 1270 |

*Datos en azul corresponden a toma externa / Values in blue correspond to external impulse

d=0,83 $Kg/m^3$ AC 10

DUNGS®
Combustion Controls

**Tablas de caudal / Flow tables (Imperial units)**

| Ø10 | Pressures (Psig/"WC) vs Flow (SCFH) | | | | | | | |
|---|---|---|---|---|---|---|---|---|
| **Pin / Pout** | **4 Psig** | **6 Psig** | **7 Psig** | **10 Psig** | **13 Psig** | **16 Psig** | **19 Psig** | **22 Psig** |
| **3 Psig** | - | - | - | - | - | - | - | - |
| **4 Psig** | - | - | - | - | - | - | - | - |
| **6 Psig** | 1420 | - | - | - | - | - | - | - |
| **7 Psig** | 2009 | 1473 | - | - | - | - | - | - |
| **11 Psig** | 3013 | 2756 | 2411 | 1147 | - | - | - | - |
| **15 Psig** | 3758 | 3609 | 3409 | 2810 | 1714 | - | - | - |
| **22 Psig** | 4920 | 4886 | 4821 | 4588 | 4199 | 3603 | 2657 | - |
| **29 Psig** | 5905 | 5905 | 5905 | 5849 | 5686 | 5405 | 4970 | 4367 |
| **44 Psig** | 7864 | 7864 | 7864 | 7864 | 7864 | 7853 | 7746 | 7564 |
| **58 Psig** | 9824 | 9824 | 9824 | 9824 | 9824 | 9824 | 9791 | 9765 |
| **73 Psig** | 11784 | 11784 | 11784 | 11784 | 11784 | 11784 | 11744 | 11713 |
| **87 Psig** | 13744 | 13744 | 13744 | 13744 | 13744 | 13744 | 13697 | 13661 |
| **102 Psig** | 15703 | 15703 | 15703 | 15703 | 15703 | 15703 | 15650 | 15609 |
| **116 Psig** | 17663 | 17663 | 17663 | 17663 | 17663 | 17663 | 17603 | 17557 |
| **131 Psig** | 19623 | 19623 | 19623 | 19623 | 19623 | 19623 | 19556 | 19505 |
| **145 Psig** | 21583 | 21583 | 21583 | 21583 | 21583 | 21583 | 21510 | 21453 |

*Datos en azul corresponden a toma externa / Values in blue correspond to external impulse

d=0,05 lb/ft$^3$ AC 10

| Ø16 | Pressures (Psig/"WC) vs Flow (SCFH) | | | | | | | |
|---|---|---|---|---|---|---|---|---|
| **Pin / Pout** | **4 Psig** | **6 Psig** | **7 Psig** | **10 Psig** | **13 Psig** | **16 Psig** | **19 Psig** | **22 Psig** |
| **3 Psig** | - | - | - | - | - | - | - | - |
| **4 Psig** | - | - | - | - | - | - | - | - |
| **6 Psig** | 2431 | - | - | - | - | - | - | - |
| **7 Psig** | 3438 | 2465 | - | - | - | - | - | - |
| **11 Psig** | 5156 | 4612 | 3980 | 1866 | - | - | - | - |
| **15 Psig** | 6431 | 6039 | 5629 | 4571 | 2766 | - | - | - |
| **22 Psig** | 8420 | 8177 | 7961 | 7464 | 6775 | 5784 | 4263 | - |
| **29 Psig** | 10106 | 9881 | 9750 | 9515 | 9173 | 8675 | 7976 | 7008 |
| **44 Psig** | 13460 | 13160 | 12986 | 12793 | 12688 | 12605 | 12430 | 12138 |
| **58 Psig** | 16814 | 16439 | 16222 | 15981 | 15850 | 15768 | 15712 | 15671 |
| **73 Psig** | 20168 | 19719 | 19458 | 19169 | 19012 | 18914 | 18846 | 18797 |
| **87 Psig** | 23523 | 22998 | 22694 | 22357 | 22174 | 22059 | 21980 | 21923 |
| **102 Psig** | 26877 | 26277 | 25931 | 25545 | 25336 | 25205 | 25114 | 25049 |
| **116 Psig** | 30231 | 29557 | 29167 | 28733 | 28498 | 28350 | 28249 | 28175 |
| **131 Psig** | 33585 | 32836 | 32403 | 31921 | 31660 | 31495 | 31383 | 31301 |
| **145 Psig** | 36939 | 36115 | 35639 | 35109 | 34821 | 34641 | 34517 | 34427 |

*Datos en azul corresponden a toma externa / Values in blue correspond to external impulse

d=0,05 lb/ft$^3$ AC 10

DUNGS®
Combustion Controls

**Tablas de caudal / Flow tables (Imperial units)**

| Ø20 | Pressures (Psig/"WC) vs Flow (SCFH) | | | | | | | |
|---|---|---|---|---|---|---|---|---|
| **Pin / Pout** | **4 Psig** | **6 Psig** | **7 Psig** | **10 Psig** | **13 Psig** | **16 Psig** | **19 Psig** | **22 Psig** |
| **3 Psig** | - | - | - | - | - | - | - | - |
| **4 Psig** | - | - | - | - | - | - | - | - |
| **6 Psig** | 2838 | - | - | - | - | - | - | - |
| **7 Psig** | 4014 | 2879 | - | - | - | - | - | - |
| **11 Psig** | 6021 | 5386 | 4648 | 2179 | - | - | - | - |
| **15 Psig** | 7510 | 7052 | 6573 | 5337 | 3230 | - | - | - |
| **22 Psig** | 9833 | 9548 | 9296 | 8716 | 7911 | 6754 | 4978 | - |
| **29 Psig** | 11801 | 11538 | 11385 | 11110 | 10712 | 10130 | 9314 | 8184 |
| **44 Psig** | 15718 | 15367 | 15164 | 14939 | 14817 | 14719 | 14515 | 14174 |
| **58 Psig** | 19634 | 19197 | 18943 | 18662 | 18509 | 18413 | 18347 | 18299 |
| **73 Psig** | 23551 | 23026 | 22722 | 22384 | 22201 | 22086 | 22007 | 21949 |
| **87 Psig** | 27468 | 26855 | 26501 | 26107 | 25893 | 25759 | 25667 | 25600 |
| **102 Psig** | 31384 | 30685 | 30280 | 29829 | 29585 | 29432 | 29327 | 29250 |
| **116 Psig** | 35301 | 34514 | 34058 | 33552 | 33277 | 33105 | 32986 | 32900 |
| **131 Psig** | 39218 | 38343 | 37837 | 37275 | 36969 | 36778 | 36646 | 36550 |
| **145 Psig** | 43135 | 42173 | 41616 | 40997 | 40662 | 40451 | 40306 | 40201 |

*Datos en azul corresponden a toma externa / Values in blue correspond to external impulse

d=0,05 lb/ft$^3$ AC 10

| Ø25 | Pressures (Psig/"WC) vs Flow (SCFH) | | | | | | | |
|---|---|---|---|---|---|---|---|---|
| **Pin / Pout** | **4 Psig** | **6 Psig** | **7 Psig** | **10 Psig** | **13 Psig** | **16 Psig** | **19 Psig** | **22 Psig** |
| **3 Psig** | - | - | - | - | - | - | - | - |
| **4 Psig** | - | - | - | - | - | - | - | - |
| **6 Psig** | 3286 | - | - | - | - | - | - | - |
| **7 Psig** | 4632 | 3322 | - | - | - | - | - | - |
| **11 Psig** | 6890 | 6163 | 5318 | 2493 | - | - | - | - |
| **15 Psig** | 8521 | 8001 | 7458 | 6056 | 3665 | - | - | - |
| **22 Psig** | 10967 | 10650 | 10369 | 9721 | 8824 | 7533 | 5553 | - |
| **29 Psig** | 12936 | 12647 | 12480 | 12179 | 11742 | 11104 | 10209 | 8970 |
| **44 Psig** | 16624 | 16254 | 16039 | 15801 | 15671 | 15568 | 15352 | 14992 |
| **58 Psig** | 20012 | 19566 | 19307 | 19020 | 18865 | 18767 | 18700 | 18651 |
| **73 Psig** | 23098 | 22583 | 22285 | 21954 | 21774 | 21661 | 21584 | 21527 |
| **87 Psig** | 25883 | 25306 | 24972 | 24601 | 24399 | 24273 | 24186 | 24123 |
| **102 Psig** | 0 | 0 | 33783 | 33281 | 33009 | 32837 | 32720 | 32634 |
| **116 Psig** | 0 | 0 | 0 | 37434 | 37128 | 36935 | 36803 | 36707 |
| **131 Psig** | 0 | 0 | 0 | 0 | 41247 | 41033 | 40887 | 40780 |
| **145 Psig** | 0 | 0 | 0 | 0 | 0 | 45131 | 44970 | 44852 |

*Datos en azul corresponden a toma externa / Values in blue correspond to external impulse

d=0,05 lb/ft$^3$ AC 10

Plano CAD, no cambiar manualmente!
CAD-Drawing, do not change manually!

This design and/or document is proprietary and protected by copyright.
It may not, without our prior express consent, be copied nor transmitted
to any third party. It must be returned to us upon discharge of the order.

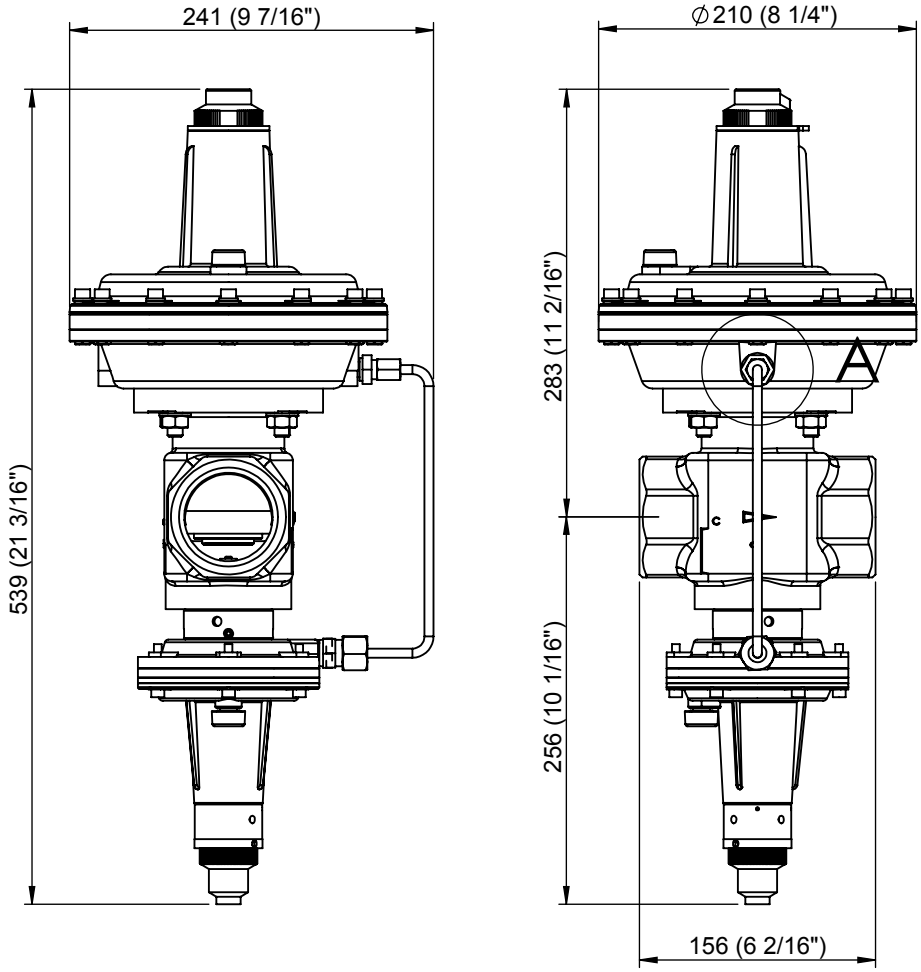


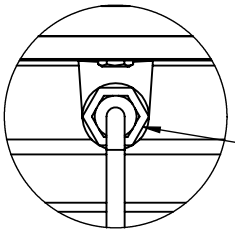

External impulse
connection on request

DETALLE A
ESCALA 2 : 5

3D

| Rev | Descripción Modificación | Fecha | Nom |
|---|---|---|---|
| | | | |
| | | | |
| | | | |
| | | | |
| | | | |
| | | | |
| | | | |
| | | | |
| | | | |
| | | | |
| | | | |
| | | | |

**Karl Dungs S.L.U.**
**Combustion Controls**
Avinguda de Can Roqueta, 15 - Pol. Can Roqueta
E-08202 - Sabadell
Barcelona - ESPAÑA

| | Fecha | Nombre | Firmado |
|---|---|---|---|
| Dibujado | 31/10/2018 | A.Rof | |
| Verificado | 31/10/2018 | J.Inglés | |
| Aprobado | 31/10/2018 | GX | |

Tolerancias según ISO 2768
TOLERANCIAS GENERALES ISO 2768-mK
(MEDIUM) TOLERANCIAS LINEALES
Roscas a 6g/6H y longitudes +1.0/-0

Rz 12.5 ( )

Eliminar rebabas y cantos vivos

Escala: 1:5

Material:

Acabado:

Tratamiento:

Peso: 10902.91 gr.

Descripción:
DIMENSIONS FRM-NOC10020HD

| Código Pieza | Rev. | Formato | Pág. |
|---|---|---|---|
| FRM-NOC10020HD | 0 | A4 | 1 de 1 |

Dimensiones en mm (inch)

Queda prohibida la preproducción total o parcial de este documento
y del contenido del mismo sin la autorización escrita de Karl Dungs S.L.U.
Todos los derechos reservados.

## ESPECIFICACIONES TÉCNICAS / TECHNICAL SPECIFICATION

DUNGS®
Combustion Controls

Regulador de presión con válvula de seguridad, conforme a las normas EN-334 y EN-14382 /
Pressure regulator with safety shut-off valve, in accordance with the standards EN-334 and EN-14382

| | |
|---|---|
| Presión de operación / Operating pressure | Max. 10 Bar / 1000 kPa / 145 Psig |
| Rango de presión de salida FRM / Outlet pressure range FRM | Ver tabla de Selección / See Set point Table |
| Temperatura máxima ambiental / Ambient maximum temperature | 60 ºC / 145ºF |
| Temperatura minima ambiental / Ambient minimum temperature | -20 ºC / -10 ºF |
| Fluido / Flow | Gas Natural, GLP / Natural Gas, LPG |
| Posición de montaje / Mounting Position | 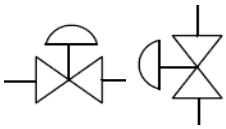 *Puede variar el tarado para presiones inferiores a 300 mbar / for pressures below 300 mbar setpoint can be altered |
| Tipo de Construcción / Construction Type: | DS (De resistencia diferencial) / DS (Diferential strenght) |
| Materiales / Materials — Cuerpo / Body | Hierro fundido / Cast iron EN GJS 500-7 or EN GJS 400-15 |
| Actuador / Actuator | Aluminio / Aluminium |
| Membranas / Membranes | NBR EN549 conform |
| Diametro Nominal / Nominal Diameter | Rosca 2" BSP o NPT / Thread 2" BSP or NPT |

| | BSP / SAV | BSP | NPT / SAV | NPT |
|---|---|---|---|---|
| Codigo de producto / Product's code | 279083 | 279053 | 280247 | 280235 |

Producto diseñado acorde a las normas EN-334 y EN-14382 / Product designed in accordance to EN-334 and EN-14382
Categoría III (Regulador) y IV (Válvula de seguridad) acorde a PED 2014/68/UE & CRN B51.14 pendiente
Product category III (Regulator) and IV (Safety valve) according to PED 2014/68/UE & CRN B51.14 pending

| Muelle de regulación / Regulation spring | | | | | | | | | | | |
|---|---|---|---|---|---|---|---|---|---|---|---|
| Ø hilo / wire | Rango / Range (min-Max) | | | | | | | | | Color/Color | codigo/code |
| 10 | 1000 | 1600 | (mbar) | 100 | 160 | (kPa) | 14,5 | 23,2 | (psig) | lila/purple | 286389 |
| 11 | 1500 | 2400 | (mbar) | 150 | 240 | (kPa) | 21,8 | 34,8 | (psig) | naranja/orange | 286390 |
| 12 | 2300 | 3600 | (mbar) | 230 | 360 | (kPa) | 33,4 | 52,2 | (psig) | rosa/pink | 286393 |
| 13 | 3500 | 4000 | (mbar) | 350 | 400 | (kPa) | 50,8 | 58 | (psig) | rojo/red | 286394 |

| Muelle de mínima presión / Under pressure spring (UPSO) | | | | | | | | | | | |
|---|---|---|---|---|---|---|---|---|---|---|---|
| Ø hilo / wire | Rango / Range (min-Max) | | | | | | | | | Color/Color | codigo/code |
| 2,5 | 150 | 500 | (mbar) | 15 | 50 | (kPa) | 2,2 | 7,3 | (psig) | lila/purple | 270178 |
| 2,8 | 300 | 1000 | (mbar) | 30 | 100 | (kPa) | 4,4 | 14,5 | (psig) | naranja/orange | 270179 |
| 3 | 800 | 1400 | (mbar) | 80 | 140 | (kPa) | 11,6 | 20,3 | (psig) | plata/silver | 270180 |
| 3,5 | 1200 | 3000 | (mbar) | 120 | 300 | (kPa) | 17,4 | 43,5 | (psig) | rosa/pink | 270124 |

| Muelle de máxima presión / Over pressure spring (OPSO) | | | | | | | | | | | |
|---|---|---|---|---|---|---|---|---|---|---|---|
| Ø hilo / wire | Rango / Range (min-Max) | | | | | | | | | Color/Color | codigo/code |
| 4,5 | 1300 | 2500 | (mbar) | 130 | 250 | (kPa) | 18,9 | 36,3 | (psig) | naranja/orange | 270188 |
| 4,8 | 1800 | 3500 | (mbar) | 180 | 350 | (kPa) | 26,1 | 50,8 | (psig) | rosa/pink | 270189 |
| 5 | 2500 | 5000 | (mbar) | 250 | 500 | (kPa) | 36,3 | 72,5 | (psig) | blanco/white | 271114 |

| Orificios / Orifices | | | | | | | | | | |
|---|---|---|---|---|---|---|---|---|---|---|
| Medida/size | Ø10 | | Ø16 | | Ø20 | | Ø25 | | | |
| $P_{umax}$* (bar/psig) | 10 | 145 | 10 | 145 | 10 | 145 | 10 | 145 | | |

*Máxima presión de entrada / Maximum inlet pressure

Regulador de gas para media presión / Gas regulator for medium pressure
**FRM-NOC 10020UHD / SAV HD**

DUNGS®
Combustion Controls

**Tablas de caudal / Flow tables (SI units)**

| Ø10 | Pressures (Bar) vs Flow ($Nm^3/h$) | | | | | | | |
|---|---|---|---|---|---|---|---|---|
| **Pin / Pout** | **1** | **1,25** | **1,5** | **1,75** | **2** | **2,5** | **3** | **4** |
| **0,2** | - | - | - | - | - | - | - | - |
| **0,3** | - | - | - | - | - | - | - | - |
| **0,4** | - | - | - | - | - | - | - | - |
| **0,5** | - | - | - | - | - | - | - | - |
| **0,75** | - | - | - | - | - | - | - | - |
| **1** | - | - | - | - | - | - | - | - |
| **1,5** | 111 | 83 | - | - | - | - | - | - |
| **2** | 157 | 145 | 124 | 92 | - | - | - | - |
| **3** | 223 | 221 | 216 | 206 | 193 | 147 | - | - |
| **4** | 278 | 278 | 278 | 277 | 272 | 255 | 222 | - |
| **5** | 334 | 334 | 334 | 334 | 334 | 329 | 314 | 249 |
| **6** | 389 | 389 | 389 | 389 | 389 | 389 | 385 | 351 |
| **7** | 445 | 445 | 445 | 445 | 445 | 445 | 445 | 430 |
| **8** | 500 | 500 | 500 | 500 | 500 | 500 | 500 | 497 |
| **9** | 556 | 556 | 556 | 556 | 556 | 556 | 556 | 556 |
| **10** | 611 | 611 | 611 | 611 | 611 | 611 | 611 | 611 |

*Datos en azul corresponden a toma externa / Values in blue correspond to external impulse

d=0,83 $Kg/m^3$ AC 10

| Ø16 | Pressures (Bar) vs Flow ($Nm^3/h$) | | | | | | | |
|---|---|---|---|---|---|---|---|---|
| **Pin / Pout** | **1** | **1,25** | **1,5** | **1,75** | **2** | **2,5** | **3** | **4** |
| **0,2** | - | - | - | - | - | - | - | - |
| **0,3** | - | - | - | - | - | - | - | - |
| **0,4** | - | - | - | - | - | - | - | - |
| **0,5** | - | - | - | - | - | - | - | - |
| **0,75** | - | - | - | - | - | - | - | - |
| **1** | - | - | - | - | - | - | - | - |
| **1,5** | 188 | 150 | - | - | - | - | - | - |
| **2** | 266 | 260 | 233 | 179 | - | - | - | - |
| **3** | 376 | 396 | 404 | 399 | 382 | 303 | - | - |
| **4** | 469 | 499 | 522 | 536 | 541 | 524 | 469 | - |
| **5** | 563 | 599 | 626 | 646 | 662 | 677 | 663 | 541 |
| **6** | 657 | 699 | 730 | 754 | 773 | 801 | 812 | 765 |
| **7** | 750 | 798 | 834 | 861 | 883 | 915 | 938 | 937 |
| **8** | 844 | 898 | 938 | 968 | 993 | 1029 | 1055 | 1082 |
| **9** | 938 | 997 | 1042 | 1076 | 1103 | 1143 | 1172 | 1210 |
| **10** | 1031 | 1097 | 1146 | 1183 | 1213 | 1258 | 1289 | 1331 |

*Datos en azul corresponden a toma externa / Values in blue correspond to external impulse

d=0,83 $Kg/m^3$ AC 10

DUNGS®
Combustion Controls

**Tablas de caudal / Flow tables (SI units)**

| Ø20 | Pressures (Bar) vs Flow ($Nm^3/h$) | | | | | | | |
|---|---|---|---|---|---|---|---|---|
| **Pin / Pout** | **1** | **1,25** | **1,5** | **1,75** | **2** | **2,5** | **3** | **4** |
| **0,2** | - | - | - | - | - | - | - | - |
| **0,3** | - | - | - | - | - | - | - | - |
| **0,4** | - | - | - | - | - | - | - | - |
| **0,5** | - | - | - | - | - | - | - | - |
| **0,75** | - | - | - | - | - | - | - | - |
| **1** | - | - | - | - | - | - | - | - |
| **1,5** | 219 | 175 | - | - | - | - | - | - |
| **2** | 310 | 303 | 272 | 209 | - | - | - | - |
| **3** | 439 | 463 | 472 | 466 | 447 | 353 | - | - |
| **4** | 548 | 583 | 609 | 626 | 632 | 612 | 548 | - |
| **5** | 657 | 699 | 730 | 754 | 773 | 790 | 774 | 632 |
| **6** | 767 | 816 | 852 | 880 | 902 | 935 | 948 | 893 |
| **7** | 876 | 932 | 973 | 1005 | 1031 | 1068 | 1095 | 1094 |
| **8** | 985 | 1048 | 1095 | 1131 | 1159 | 1202 | 1232 | 1263 |
| **9** | 1095 | 1165 | 1216 | 1256 | 1288 | 1335 | 1368 | 1413 |
| **10** | 1204 | 1281 | 1338 | 1382 | 1417 | 1468 | 1505 | 1554 |

*Datos en azul corresponden a toma externa / Values in blue correspond to external impulse

d=0,83 $Kg/m^3$ AC 10

| Ø25 | Pressures (Bar) vs Flow ($Nm^3/h$) | | | | | | | |
|---|---|---|---|---|---|---|---|---|
| **Pin / Pout** | **1** | **1,25** | **1,5** | **1,75** | **2** | **2,5** | **3** | **4** |
| **0,2** | - | - | - | - | - | - | - | - |
| **0,3** | - | - | - | - | - | - | - | - |
| **0,4** | - | - | - | - | - | - | - | - |
| **0,5** | - | - | - | - | - | - | - | - |
| **0,75** | - | - | - | - | - | - | - | - |
| **1** | - | - | - | - | - | - | - | - |
| **1,5** | 249 | 199 | - | - | - | - | - | - |
| **2** | 352 | 344 | 309 | 237 | - | - | - | - |
| **3** | 498 | 525 | 535 | 529 | 507 | 401 | - | - |
| **4** | 622 | 662 | 691 | 710 | 717 | 695 | 621 | - |
| **5** | 746 | 794 | 829 | 856 | 878 | 897 | 879 | 717 |
| **6** | 870 | 926 | 967 | 998 | 1024 | 1061 | 1076 | 1014 |
| **7** | 994 | 1057 | 1104 | 1141 | 1169 | 1212 | 1243 | 1241 |
| **8** | 1118 | 1189 | 1242 | 1283 | 1315 | 1364 | 1398 | 1434 |
| **9** | 1242 | 1321 | 1380 | 1425 | 1461 | 1515 | 1553 | 1603 |
| **10** | 1366 | 1453 | 1518 | 1568 | 1607 | 1666 | 1708 | 1763 |

*Datos en azul corresponden a toma externa / Values in blue correspond to external impulse

d=0,83 $Kg/m^3$ AC 10

DUNGS®
Combustion Controls

**Tablas de caudal / Flow tables (Imperial units)**

| Ø10 | Pressures (Psig/"WC) vs Flow (SCFH) | | | | | | | |
|---|---|---|---|---|---|---|---|---|
| **Pin / Pout** | **15 Psig** | **18 Psig** | **22 Psig** | **25 Psig** | **29 Psig** | **36 Psig** | **44 Psig** | **58 Psig** |
| **3 Psig** | - | - | - | - | - | - | - | - |
| **4 Psig** | - | - | - | - | - | - | - | - |
| **6 Psig** | - | - | - | - | - | - | - | - |
| **7 Psig** | - | - | - | - | - | - | - | - |
| **11 Psig** | - | - | - | - | - | - | - | - |
| **15 Psig** | - | - | - | - | - | - | - | - |
| **22 Psig** | 3932 | 2948 | - | - | - | - | - | - |
| **29 Psig** | 5561 | 5106 | 4394 | 3258 | - | - | - | - |
| **44 Psig** | 7864 | 7800 | 7610 | 7284 | 6803 | 5195 | - | - |
| **58 Psig** | 9824 | 9824 | 9824 | 9773 | 9622 | 8997 | 7852 | - |
| **73 Psig** | 11784 | 11784 | 11784 | 11784 | 11784 | 11616 | 11104 | 8776 |
| **87 Psig** | 13744 | 13744 | 13744 | 13744 | 13744 | 13744 | 13600 | 12411 |
| **102 Psig** | 15703 | 15703 | 15703 | 15703 | 15703 | 15703 | 15703 | 15200 |
| **116 Psig** | 17663 | 17663 | 17663 | 17663 | 17663 | 17663 | 17663 | 17551 |
| **131 Psig** | 19623 | 19623 | 19623 | 19623 | 19623 | 19623 | 19623 | 19623 |
| **145 Psig** | 21583 | 21583 | 21583 | 21583 | 21583 | 21583 | 21583 | 21583 |

*Datos en azul corresponden a toma externa / Values in blue correspond to external impulse

d=0,05 lb/ft$^3$ AC 10

| Ø16 | Pressures (Psig/"WC) vs Flow (SCFH) | | | | | | | |
|---|---|---|---|---|---|---|---|---|
| **Pin / Pout** | **15 Psig** | **18 Psig** | **22 Psig** | **25 Psig** | **29 Psig** | **36 Psig** | **44 Psig** | **58 Psig** |
| **3 Psig** | - | - | - | - | - | - | - | - |
| **4 Psig** | - | - | - | - | - | - | - | - |
| **6 Psig** | - | - | - | - | - | - | - | - |
| **7 Psig** | - | - | - | - | - | - | - | - |
| **11 Psig** | - | - | - | - | - | - | - | - |
| **15 Psig** | - | - | - | - | - | - | - | - |
| **22 Psig** | 6634 | 5291 | - | - | - | - | - | - |
| **29 Psig** | 9382 | 9164 | 8236 | 6306 | - | - | - | - |
| **44 Psig** | 13268 | 13999 | 14265 | 14102 | 13503 | 10687 | - | - |
| **58 Psig** | 16574 | 17632 | 18415 | 18919 | 19096 | 18511 | 16558 | - |
| **73 Psig** | 19880 | 21149 | 22089 | 22813 | 23388 | 23897 | 23416 | 19103 |
| **87 Psig** | 23187 | 24666 | 25763 | 26607 | 27278 | 28276 | 28679 | 27016 |
| **102 Psig** | 26493 | 28184 | 29436 | 30401 | 31168 | 32308 | 33115 | 33087 |
| **116 Psig** | 29799 | 31701 | 33110 | 34195 | 35057 | 36340 | 37248 | 38206 |
| **131 Psig** | 33105 | 35218 | 36783 | 37989 | 38947 | 40372 | 41381 | 42716 |
| **145 Psig** | 36411 | 38735 | 40457 | 41783 | 42837 | 44404 | 45514 | 46982 |

*Datos en azul corresponden a toma externa / Values in blue correspond to external impulse

d=0,05 lb/ft$^3$ AC 10

DUNGS®
Combustion Controls

**Tablas de caudal / Flow tables (Imperial units)**

| Ø20 | Pressures (Psig/"WC) vs Flow (SCFH) | | | | | | | |
|---|---|---|---|---|---|---|---|---|
| **Pin / Pout** | **15 Psig** | **18 Psig** | **22 Psig** | **25 Psig** | **29 Psig** | **36 Psig** | **44 Psig** | **58 Psig** |
| **3 Psig** | - | - | - | - | - | - | - | - |
| **4 Psig** | - | - | - | - | - | - | - | - |
| **6 Psig** | - | - | - | - | - | - | - | - |
| **7 Psig** | - | - | - | - | - | - | - | - |
| **11 Psig** | - | - | - | - | - | - | - | - |
| **15 Psig** | - | - | - | - | - | - | - | - |
| **22 Psig** | 7747 | 6179 | - | - | - | - | - | - |
| **29 Psig** | 10955 | 10701 | 9617 | 7364 | - | - | - | - |
| **44 Psig** | 15493 | 16347 | 16657 | 16467 | 15768 | 12480 | - | - |
| **58 Psig** | 19354 | 20589 | 21504 | 22093 | 22299 | 21616 | 19335 | - |
| **73 Psig** | 23215 | 24696 | 25794 | 26640 | 27311 | 27906 | 27344 | 22307 |
| **87 Psig** | 27075 | 28803 | 30084 | 31070 | 31853 | 33018 | 33489 | 31547 |
| **102 Psig** | 30936 | 32911 | 34373 | 35500 | 36395 | 37727 | 38670 | 38637 |
| **116 Psig** | 34797 | 37018 | 38663 | 39930 | 40937 | 42435 | 43495 | 44614 |
| **131 Psig** | 38658 | 41125 | 42953 | 44361 | 45479 | 47143 | 48321 | 49880 |
| **145 Psig** | 42518 | 45232 | 47242 | 48791 | 50021 | 51851 | 53147 | 54861 |

*Datos en azul corresponden a toma externa / Values in blue correspond to external impulse

d=0,05 lb/ft$^3$ AC 10

| Ø25 | Pressures (Psig/"WC) vs Flow (SCFH) | | | | | | | |
|---|---|---|---|---|---|---|---|---|
| **Pin / Pout** | **15 Psig** | **18 Psig** | **22 Psig** | **25 Psig** | **29 Psig** | **36 Psig** | **44 Psig** | **58 Psig** |
| **3 Psig** | - | - | - | - | - | - | - | - |
| **4 Psig** | - | - | - | - | - | - | - | - |
| **6 Psig** | - | - | - | - | - | - | - | - |
| **7 Psig** | - | - | - | - | - | - | - | - |
| **11 Psig** | - | - | - | - | - | - | - | - |
| **15 Psig** | - | - | - | - | - | - | - | - |
| **22 Psig** | 8789 | 7010 | - | - | - | - | - | - |
| **29 Psig** | 12430 | 12142 | 10912 | 8356 | - | - | - | - |
| **44 Psig** | 17579 | 18547 | 18899 | 18684 | 17891 | 14160 | - | - |
| **58 Psig** | 21959 | 23361 | 24399 | 25067 | 25301 | 24525 | 21938 | - |
| **73 Psig** | 26340 | 28021 | 29266 | 30226 | 30987 | 31662 | 31024 | 25310 |
| **87 Psig** | 30720 | 32681 | 34133 | 35252 | 36141 | 37463 | 37997 | 35794 |
| **102 Psig** | 35101 | 37341 | 39000 | 40279 | 41294 | 42805 | 43875 | 43838 |
| **116 Psig** | 39481 | 42001 | 43868 | 45306 | 46448 | 48147 | 49351 | 50620 |
| **131 Psig** | 43862 | 46661 | 48735 | 50332 | 51601 | 53489 | 54826 | 56595 |
| **145 Psig** | 48242 | 51321 | 53602 | 55359 | 56755 | 58831 | 60302 | 62247 |

*Datos en azul corresponden a toma externa / Values in blue correspond to external impulse

d=0,05 lb/ft$^3$ AC 10

Plano CAD, no cambiar manualmente!
CAD-Drawing, do not change manually!

This design and/or document is proprietary and protected by copyright.
It may not, without our prior express consent, be copied nor transmitted
to any third party. It must be returned to us upon discharge of the order.

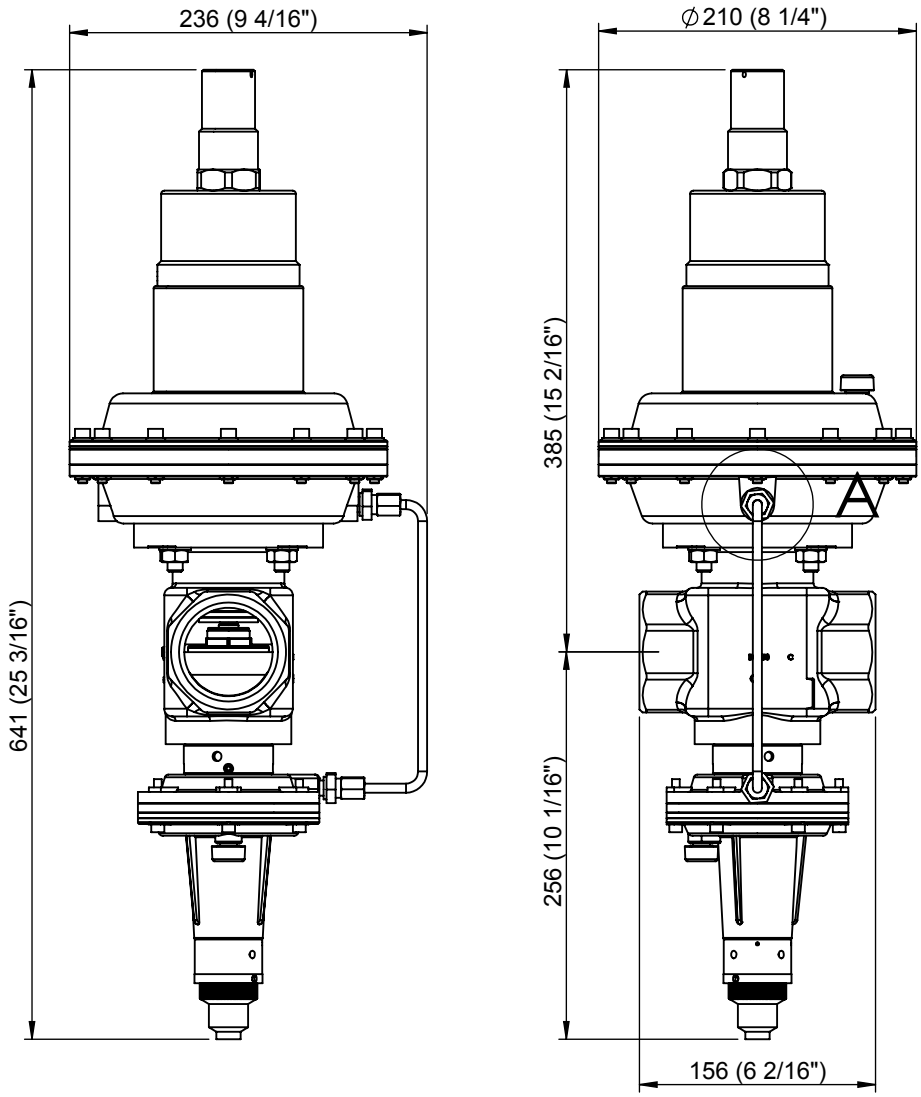


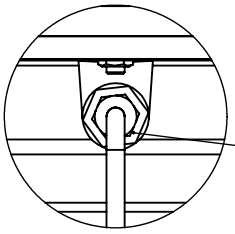

External impulse
connection on request

DETALLE A
ESCALA 2 : 5

3D

| Rev | Descripción Modificación | Fecha | Nom |
|---|---|---|---|
| | | | |

**Karl Dungs S.L.U.**
**Combustion Controls**
Avinguda de Can Roqueta, 15 - Pol. Can Roqueta
E-08202 - Sabadell
Barcelona - ESPAÑA

| | Fecha | Nombre | Firmado |
|---|---|---|---|
| Dibujado | 31/10/2018 | A. Rof | |
| Verificado | 31/10/2018 | J. Inglés | |
| Aprobado | 31/10/2018 | GX | |

Tolerancias según ISO 2768
TOLERANCIAS GENERALES ISO 2768-mK
(MEDIUM) TOLERANCIAS LINEALES
Roscas a 6g/6H y longitudes +1.0/-0

Rz 12.5 ( )

Eliminar rebabas y cantos vivos

Escala: 1:5

Material:

Acabado:

Tratamiento:

Peso: 15023.80 gr.

Descripción:
DIMENSIONS FRM-NOC10020UHD

| Código Pieza | Rev. | Formato | Pág. |
|---|---|---|---|
| FRM-NOC10020UHD | 0 | A4 | 1 de 1 |

Dimensiones en mm (inch)

Queda prohibida la preproducción total o parcial de este documento
y del contenido del mismo sin la autorización escrita de Karl Dungs S.L.U.
Todos los derechos reservados.

## ESPECIFICACIONES TÉCNICAS / TECHNICAL SPECIFICATION

DUNGS®
Combustion Controls

Regulador de presión con válvula de seguridad, conforme a las normas EN-334 y EN-14382 /
Pressure regulator with safety shut-off valve, in accordance with the standards EN-334 and EN-14382

| | |
|---|---|
| Presión de operación / Operating pressure | Max. 10 Bar / 1000 kPa / 145 Psig |
| Rango de presión de salida FRM / Outlet pressure range FRM | Ver tabla de Selección / See Set point Table |
| Temperatura máxima ambiental / Ambient maximum temperature | 60 ºC / 145ºF |
| Temperatura minima ambiental / Ambient minimum temperature | -20 ºC / -10 ºF |
| Fluido / Flow | Gas Natural, GLP / Natural Gas, LPG |
| Posición de montaje / Mounting Position | 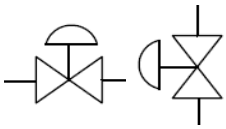 *Puede variar el tarado para presiones inferiores a 300 mbar / for pressures below 300 mbar setpoint can be altered |
| Tipo de Construcción / Construction Type: | DS (De resistencia diferencial) / DS (Diferential strenght) |
| Materiales / Materials — Cuerpo / Body | Hierro fundido / Cast iron EN GJS 500-7 or EN GJS 400-15 |
| Actuador / Actuator | Aluminio / Aluminium |
| Membranas / Membranes | NBR EN549 conform |
| Diametro Nominal / Nominal Diameter | Bridas de conexión PN 25 según EN1092-1 / Connecting flange PN 25 according to EN1092-1 DN 25 |

| Codigo de producto / Product's code | BSP / SAV | BSP | NPT / SAV | NPT |
|---|---|---|---|---|
| | 279073 | 279085 | 280248 | 280260 |

Producto diseñado acorde a las normas EN-334 y EN-14382 / Product designed in accordance to EN-334 and EN-14382
Categoría III (Regulador) y IV (Válvula de seguridad) acorde a PED 2014/68/UE & CRN B51.14 pendiente
Product category III (Regulator) and IV (Safety valve) according to PED 2014/68/UE & CRN B51.14 pending

| Muelle de regulación / Regulation spring | | | | | | | | | | | |
|---|---|---|---|---|---|---|---|---|---|---|---|
| Ø hilo / wire | Rango / Range (min-Max) | | | | | | | | | Color/Color | codigo/code |
| 2,5 | 20 | 35 | (mbar) | 2 | 3,5 | (kPa) | 10 | 10 | ("WC) | rojo/red | 286372 |
| 2,8 | 30 | 55 | (mbar) | 3 | 5,5 | (kPa) | 10 | 20 | ("WC) | blanco/white | 286373 |
| 3 | 50 | 75 | (mbar) | 5 | 7,5 | (kPa) | 20 | 30 | ("WC) | amarillo/yellow | 286374 |
| 3,2 | 60 | 100 | (mbar) | 6 | 10 | (kPa) | 20 | 40 | ("WC) | azul/blue | 287676 |

| Muelle de mínima presión / Under pressure spring (UPSO) | | | | | | | | | | | |
|---|---|---|---|---|---|---|---|---|---|---|---|
| Ø hilo / wire | Rango / Range (min-Max) | | | | | | | | | Color/Color | codigo/code |
| 1,25 | 10 | 32 | (mbar) | 1 | 3,2 | (kPa) | 0 | 10 | ("WC) | Blanco/white | 270171 |
| 1,5 | 24 | 40 | (mbar) | 2,4 | 4 | (kPa) | 10 | 20 | ("WC) | Amarillo/yellow | 270175 |
| 2 | 30 | 115 | (mbar) | 3 | 11,5 | (kPa) | 10 | 50 | ("WC) | azul/blue | 270176 |

| Muelle de máxima presión / Over pressure spring (OPSO) | | | | | | | | | | | |
|---|---|---|---|---|---|---|---|---|---|---|---|
| Ø hilo / wire | Rango / Range (min-Max) | | | | | | | | | Color/Color | codigo/code |
| 2,25 | 40 | 130 | (mbar) | 4 | 13 | (kPa) | 20 | 1,9 | ("WC) | plata/silver | 270181 |
| 2,5 | 60 | 190 | (mbar) | 6 | 19 | (kPa) | 20 | 2,8 | ("WC) | verde/green | 270182 |
| 2,75 | 90 | 240 | (mbar) | 9 | 24 | (kPa) | 40 | 3,5 | ("WC) | rojo/red | 270183 |

| Orificios / Orifices | | | | | | |
|---|---|---|---|---|---|---|
| Medida/size | Ø6 | Ø8 | Ø10 | Ø12 | | |
| $P_{umax}$* (bar/psig) | 10 / 145 | 10 / 145 | 10 / 145 | 10 / 145 | | |

*Máxima presión de entrada / Maximum inlet pressure

DUNGS®
Combustion Controls

**Tablas de caudal / Flow tables (SI units)**

| Ø6 | Pressures (Bar) vs Flow ($Nm^3/h$) | | | | | | | |
|---|---|---|---|---|---|---|---|---|
| **Pin / Pout** | **0,02** | **0,03** | **0,04** | **0,05** | **0,06** | **0,07** | **0,08** | **0,1** |
| **0,2** | 14 | 14 | 14 | 13 | 13 | 12 | 12 | 11 |
| **0,3** | 18 | 18 | 17 | 17 | 17 | 16 | 16 | 16 |
| **0,4** | 21 | 21 | 20 | 20 | 20 | 20 | 20 | 19 |
| **0,5** | 23 | 23 | 23 | 23 | 23 | 23 | 22 | 22 |
| **0,75** | 29 | 29 | 29 | 28 | 28 | 28 | 28 | 28 |
| **1** | 33 | 33 | 33 | 33 | 33 | 33 | 33 | 33 |
| **1,5** | 41 | 41 | 41 | 41 | 41 | 41 | 41 | 41 |
| **2** | 50 | 50 | 50 | 50 | 50 | 50 | 50 | 50 |
| **3** | 66 | 66 | 66 | 66 | 66 | 66 | 66 | 66 |
| **4** | 83 | 83 | 83 | 83 | 83 | 83 | 83 | 83 |
| **5** | 99 | 99 | 99 | 99 | 99 | 99 | 99 | 99 |
| **6** | 116 | 116 | 116 | 116 | 116 | 116 | 116 | 116 |
| **7** | 132 | 132 | 132 | 132 | 132 | 132 | 132 | 132 |
| **8** | 149 | 149 | 149 | 149 | 149 | 149 | 149 | 149 |
| **9** | 165 | 165 | 165 | 165 | 165 | 165 | 165 | 165 |
| **10** | 182 | 182 | 182 | 182 | 182 | 182 | 182 | 182 |

*Datos en azul corresponden a toma externa / Values in blue correspond to external impulse

d=0,83 $Kg/m^3$ AC 10

| Ø8 | Pressures (Bar) vs Flow ($Nm^3/h$) | | | | | | | |
|---|---|---|---|---|---|---|---|---|
| **Pin / Pout** | **0,02** | **0,03** | **0,04** | **0,05** | **0,06** | **0,07** | **0,08** | **0,1** |
| **0,2** | 27 | 26 | 26 | 25 | 24 | 23 | 23 | 21 |
| **0,3** | 34 | 33 | 33 | 32 | 32 | 31 | 31 | 29 |
| **0,4** | 39 | 39 | 38 | 38 | 38 | 37 | 37 | 36 |
| **0,5** | 44 | 43 | 43 | 43 | 43 | 42 | 42 | 41 |
| **0,75** | 53 | 53 | 53 | 53 | 53 | 53 | 53 | 52 |
| **1** | 61 | 61 | 61 | 61 | 61 | 61 | 61 | 61 |
| **1,5** | 75 | 75 | 75 | 75 | 75 | 75 | 75 | 75 |
| **2** | 89 | 89 | 89 | 89 | 89 | 89 | 89 | 89 |
| **3** | 114 | 114 | 114 | 114 | 114 | 114 | 114 | 114 |
| **4** | 138 | 138 | 138 | 138 | 138 | 138 | 138 | 138 |
| **5** | 159 | 159 | 159 | 159 | 159 | 159 | 159 | 159 |
| **6** | 179 | 179 | 179 | 179 | 179 | 179 | 179 | 179 |
| **7** | 196 | 196 | 196 | 196 | 196 | 196 | 196 | 196 |
| **8** | 257 | 257 | 257 | 257 | 257 | 257 | 257 | 257 |
| **9** | 285 | 285 | 285 | 285 | 285 | 285 | 285 | 285 |
| **10** | 0 | 0 | 314 | 314 | 314 | 314 | 314 | 314 |

*Datos en azul corresponden a toma externa / Values in blue correspond to external impulse

d=0,83 $Kg/m^3$ AC 10

DUNGS®
Combustion Controls

**Tablas de caudal / Flow tables (SI units)**

| Ø10 | Pressures (Bar) vs Flow ($Nm^3/h$) | | | | | | | |
|---|---|---|---|---|---|---|---|---|
| **Pin / Pout** | **0,02** | **0,03** | **0,04** | **0,05** | **0,06** | **0,07** | **0,08** | **0,1** |
| **0,2** | 43 | 42 | 40 | 39 | 38 | 37 | 36 | 33 |
| **0,3** | 53 | 52 | 51 | 50 | 50 | 49 | 48 | 46 |
| **0,4** | 61 | 60 | 60 | 59 | 59 | 58 | 57 | 56 |
| **0,5** | 68 | 68 | 67 | 67 | 66 | 66 | 65 | 64 |
| **0,75** | 82 | 82 | 82 | 82 | 82 | 81 | 81 | 81 |
| **1** | 94 | 94 | 94 | 93 | 93 | 93 | 93 | 93 |
| **1,5** | 112 | 112 | 112 | 112 | 112 | 112 | 112 | 112 |
| **2** | 130 | 130 | 130 | 130 | 130 | 130 | 130 | 130 |
| **3** | 159 | 159 | 159 | 159 | 159 | 159 | 159 | 159 |
| **4** | 180 | 180 | 180 | 180 | 180 | 180 | 180 | 180 |
| **5** | 247 | 247 | 247 | 247 | 247 | 247 | 247 | 247 |
| **6** | 0 | 288 | 288 | 288 | 288 | 288 | 288 | 288 |
| **7** | 0 | 0 | 329 | 329 | 329 | 329 | 329 | 329 |
| **8** | 0 | 0 | 0 | 370 | 370 | 370 | 370 | 370 |
| **9** | 0 | 0 | 0 | 0 | 411 | 411 | 411 | 411 |
| **10** | 0 | 0 | 0 | 0 | 0 | 452 | 452 | 452 |

*Datos en azul corresponden a toma externa / Values in blue correspond to external impulse

d=0,83 $Kg/m^3$ AC 10

| Ø12 | Pressures (Bar) vs Flow ($Nm^3/h$) | | | | | | | |
|---|---|---|---|---|---|---|---|---|
| **Pin / Pout** | **0,02** | **0,03** | **0,04** | **0,05** | **0,06** | **0,07** | **0,08** | **0,1** |
| **0,2** | 47 | 46 | 44 | 43 | 42 | 41 | 39 | 36 |
| **0,3** | 58 | 57 | 56 | 55 | 55 | 54 | 53 | 51 |
| **0,4** | 67 | 66 | 66 | 65 | 65 | 64 | 63 | 62 |
| **0,5** | 75 | 74 | 74 | 73 | 73 | 72 | 72 | 71 |
| **0,75** | 90 | 90 | 90 | 90 | 89 | 89 | 89 | 88 |
| **1** | 103 | 103 | 103 | 103 | 102 | 102 | 102 | 102 |
| **1,5** | 123 | 123 | 123 | 123 | 123 | 123 | 123 | 123 |
| **2** | 142 | 142 | 142 | 142 | 142 | 142 | 142 | 142 |
| **3** | 215 | 215 | 215 | 215 | 215 | 215 | 215 | 215 |
| **4** | 0 | 268 | 268 | 268 | 268 | 268 | 268 | 268 |
| **5** | 0 | 0 | 322 | 322 | 322 | 322 | 322 | 322 |
| **6** | 0 | 0 | 0 | 375 | 375 | 375 | 375 | 375 |
| **7** | 0 | 0 | 0 | 0 | 429 | 429 | 429 | 429 |
| **8** | 0 | 0 | 0 | 0 | 0 | 482 | 482 | 482 |
| **9** | 0 | 0 | 0 | 0 | 0 | 0 | 536 | 536 |
| **10** | 0 | 0 | 0 | 0 | 0 | 0 | 0 | 589 |

*Datos en azul corresponden a toma externa / Values in blue correspond to external impulse

d=0,83 $Kg/m^3$ AC 10

DUNGS®
Combustion Controls

**Tablas de caudal / Flow tables (Imperial units)**

| Ø6 | Pressures (Psig/"WC) vs Flow (SCFH) | | | | | | | |
|---|---|---|---|---|---|---|---|---|
| **Pin / Pout** | **8 "WC** | **12 "WC** | **16 "WC** | **20 "WC** | **24 "WC** | **28 "WC** | **32 "WC** | **40 "WC** |
| **3 Psig** | 502 | 491 | 478 | 465 | 452 | 437 | 422 | 389 |
| **4 Psig** | 627 | 618 | 610 | 601 | 591 | 582 | 571 | 550 |
| **6 Psig** | 730 | 724 | 717 | 711 | 704 | 697 | 689 | 673 |
| **7 Psig** | 821 | 816 | 811 | 806 | 801 | 795 | 790 | 777 |
| **11 Psig** | 1012 | 1010 | 1008 | 1005 | 1003 | 1000 | 997 | 991 |
| **15 Psig** | 1172 | 1172 | 1172 | 1171 | 1170 | 1169 | 1168 | 1166 |
| **22 Psig** | 1464 | 1464 | 1464 | 1464 | 1464 | 1464 | 1464 | 1464 |
| **29 Psig** | 1755 | 1755 | 1755 | 1755 | 1755 | 1755 | 1755 | 1755 |
| **44 Psig** | 2338 | 2338 | 2338 | 2338 | 2338 | 2338 | 2338 | 2338 |
| **58 Psig** | 2921 | 2921 | 2921 | 2921 | 2921 | 2921 | 2921 | 2921 |
| **73 Psig** | 3503 | 3503 | 3503 | 3503 | 3503 | 3503 | 3503 | 3503 |
| **87 Psig** | 4086 | 4086 | 4086 | 4086 | 4086 | 4086 | 4086 | 4086 |
| **102 Psig** | 4669 | 4669 | 4669 | 4669 | 4669 | 4669 | 4669 | 4669 |
| **116 Psig** | 5251 | 5251 | 5251 | 5251 | 5251 | 5251 | 5251 | 5251 |
| **131 Psig** | 5834 | 5834 | 5834 | 5834 | 5834 | 5834 | 5834 | 5834 |
| **145 Psig** | 6416 | 6416 | 6416 | 6416 | 6416 | 6416 | 6416 | 6416 |

*Datos en azul corresponden a toma externa / Values in blue correspond to external impulse

d=0,05 lb/ft$^3$ AC 10

| Ø8 | Pressures (Psig/"WC) vs Flow (SCFH) | | | | | | | |
|---|---|---|---|---|---|---|---|---|
| **Pin / Pout** | **8 "WC** | **12 "WC** | **16 "WC** | **20 "WC** | **24 "WC** | **28 "WC** | **32 "WC** | **40 "WC** |
| **3 Psig** | 953 | 931 | 907 | 883 | 857 | 829 | 801 | 737 |
| **4 Psig** | 1185 | 1169 | 1153 | 1136 | 1118 | 1100 | 1080 | 1040 |
| **6 Psig** | 1376 | 1364 | 1352 | 1340 | 1327 | 1313 | 1299 | 1269 |
| **7 Psig** | 1542 | 1533 | 1524 | 1514 | 1504 | 1494 | 1483 | 1461 |
| **11 Psig** | 1886 | 1882 | 1878 | 1873 | 1869 | 1864 | 1858 | 1847 |
| **15 Psig** | 2167 | 2167 | 2166 | 2165 | 2163 | 2162 | 2160 | 2156 |
| **22 Psig** | 2662 | 2662 | 2662 | 2662 | 2662 | 2662 | 2662 | 2662 |
| **29 Psig** | 3139 | 3139 | 3139 | 3139 | 3139 | 3139 | 3139 | 3139 |
| **44 Psig** | 4039 | 4039 | 4039 | 4039 | 4039 | 4039 | 4039 | 4039 |
| **58 Psig** | 4868 | 4868 | 4868 | 4868 | 4868 | 4868 | 4868 | 4868 |
| **73 Psig** | 5627 | 5627 | 5627 | 5627 | 5627 | 5627 | 5627 | 5627 |
| **87 Psig** | 6315 | 6315 | 6315 | 6315 | 6315 | 6315 | 6315 | 6315 |
| **102 Psig** | 6932 | 6932 | 6932 | 6932 | 6932 | 6932 | 6932 | 6932 |
| **116 Psig** | 9070 | 9070 | 9070 | 9070 | 9070 | 9070 | 9070 | 9070 |
| **131 Psig** | 10077 | 10077 | 10077 | 10077 | 10077 | 10077 | 10077 | 10077 |
| **145 Psig** | 0 | 0 | 11083 | 11083 | 11083 | 11083 | 11083 | 11083 |

*Datos en azul corresponden a toma externa / Values in blue correspond to external impulse

d=0,05 lb/ft$^3$ AC 10

DUNGS®
Combustion Controls

**Tablas de caudal / Flow tables (Imperial units)**

| Ø10 | Pressures (Psig/"WC) vs Flow (SCFH) | | | | | | | |
|---|---|---|---|---|---|---|---|---|
| **Pin / Pout** | **8 "WC** | **12 "WC** | **16 "WC** | **20 "WC** | **24 "WC** | **28 "WC** | **32 "WC** | **40 "WC** |
| **3 Psig** | 1501 | 1466 | 1429 | 1390 | 1349 | 1306 | 1261 | 1162 |
| **4 Psig** | 1859 | 1834 | 1809 | 1782 | 1754 | 1725 | 1695 | 1631 |
| **6 Psig** | 2150 | 2132 | 2113 | 2094 | 2073 | 2052 | 2030 | 1983 |
| **7 Psig** | 2399 | 2386 | 2372 | 2357 | 2341 | 2325 | 2309 | 2274 |
| **11 Psig** | 2905 | 2899 | 2893 | 2886 | 2879 | 2871 | 2863 | 2846 |
| **15 Psig** | 3304 | 3303 | 3302 | 3300 | 3298 | 3296 | 3293 | 3287 |
| **22 Psig** | 3971 | 3971 | 3971 | 3971 | 3971 | 3971 | 3971 | 3971 |
| **29 Psig** | 4575 | 4575 | 4575 | 4575 | 4575 | 4575 | 4575 | 4575 |
| **44 Psig** | 5597 | 5597 | 5597 | 5597 | 5597 | 5597 | 5597 | 5597 |
| **58 Psig** | 6372 | 6372 | 6372 | 6372 | 6372 | 6372 | 6372 | 6372 |
| **73 Psig** | 8705 | 8705 | 8705 | 8705 | 8705 | 8705 | 8705 | 8705 |
| **87 Psig** | 0 | 10153 | 10153 | 10153 | 10153 | 10153 | 10153 | 10153 |
| **102 Psig** | 0 | 0 | 11601 | 11601 | 11601 | 11601 | 11601 | 11601 |
| **116 Psig** | 0 | 0 | 0 | 13048 | 13048 | 13048 | 13048 | 13048 |
| **131 Psig** | 0 | 0 | 0 | 0 | 14496 | 14496 | 14496 | 14496 |
| **145 Psig** | 0 | 0 | 0 | 0 | 0 | 15944 | 15944 | 15944 |

*Datos en azul corresponden a toma externa / Values in blue correspond to external impulse

d=0,05 lb/ft$^3$ AC 10

| Ø12 | Pressures (Psig/"WC) vs Flow (SCFH) | | | | | | | |
|---|---|---|---|---|---|---|---|---|
| **Pin / Pout** | **8 "WC** | **12 "WC** | **16 "WC** | **20 "WC** | **24 "WC** | **28 "WC** | **32 "WC** | **40 "WC** |
| **3 Psig** | 1651 | 1612 | 1571 | 1528 | 1484 | 1436 | 1386 | 1277 |
| **4 Psig** | 2043 | 2016 | 1988 | 1959 | 1928 | 1896 | 1863 | 1793 |
| **6 Psig** | 2363 | 2343 | 2322 | 2300 | 2278 | 2254 | 2230 | 2179 |
| **7 Psig** | 2636 | 2621 | 2605 | 2589 | 2572 | 2554 | 2536 | 2497 |
| **11 Psig** | 3189 | 3182 | 3175 | 3168 | 3160 | 3151 | 3143 | 3124 |
| **15 Psig** | 3624 | 3623 | 3621 | 3619 | 3617 | 3615 | 3612 | 3605 |
| **22 Psig** | 4348 | 4348 | 4348 | 4348 | 4348 | 4348 | 4348 | 4348 |
| **29 Psig** | 5000 | 5000 | 5000 | 5000 | 5000 | 5000 | 5000 | 5000 |
| **44 Psig** | 7581 | 7581 | 7581 | 7581 | 7581 | 7581 | 7581 | 7581 |
| **58 Psig** | 0 | 9470 | 9470 | 9470 | 9470 | 9470 | 9470 | 9470 |
| **73 Psig** | 0 | 0 | 11359 | 11359 | 11359 | 11359 | 11359 | 11359 |
| **87 Psig** | 0 | 0 | 0 | 13248 | 13248 | 13248 | 13248 | 13248 |
| **102 Psig** | 0 | 0 | 0 | 0 | 15138 | 15138 | 15138 | 15138 |
| **116 Psig** | 0 | 0 | 0 | 0 | 0 | 17027 | 17027 | 17027 |
| **131 Psig** | 0 | 0 | 0 | 0 | 0 | 0 | 18916 | 18916 |
| **145 Psig** | 0 | 0 | 0 | 0 | 0 | 0 | 0 | 20805 |

*Datos en azul corresponden a toma externa / Values in blue correspond to external impulse

d=0,05 lb/ft$^3$ AC 10

Plano CAD, no cambiar manualmente!
CAD-Drawing, do not change manually!

This design and/or document is proprietary and protected by copyright.
It may not, without our prior express consent, be copied nor transmitted
to any third party. It must be returned to us upon discharge of the order.

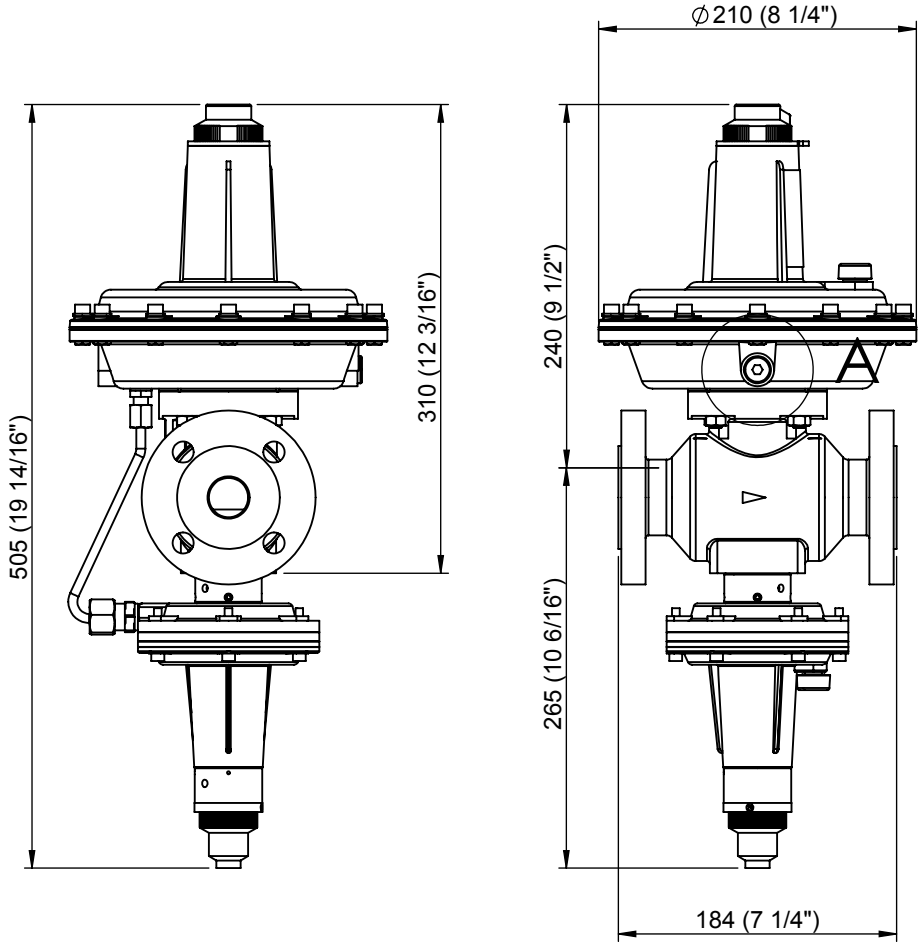


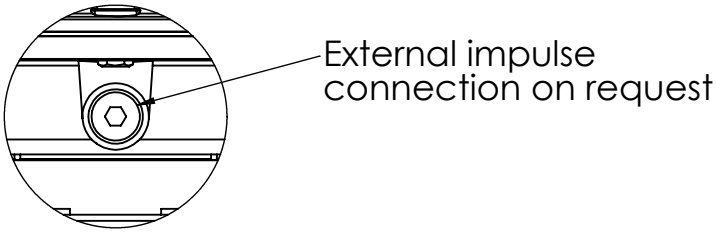


DETALLE A
ESCALA 2 : 5

3D

| Rev | Descripción Modificación | Fecha | Nom |
|---|---|---|---|
| | | | |

**Karl Dungs S.L.U.**
**Combustion Controls**
Avinguda de Can Roqueta, 15 - Pol. Can Roqueta
E-08202 - Sabadell
Barcelona - ESPAÑA

| | Fecha | Nombre | Firmado |
|---|---|---|---|
| Dibujado | 31/10/2018 | A.Rof | |
| Verificado | 31/10/2018 | J.Inglés | |
| Aprobado | 31/10/2018 | GX | |

Tolerancias según ISO 2768
TOLERANCIAS GENERALES ISO 2768-mK
(MEDIUM) TOLERANCIAS LINEALES
Roscas a 6g/6H y longitudes +1.0/-0

Rz 12.5 ( )

Eliminar rebabas y cantos vivos

Escala: 1:5

Material:

Acabado:

Tratamiento:

Peso: 11415.24 gr.

Descripción:
DIMENSIONS FRM-NOC100025ND/MD/HD

| Código Pieza | Rev. | Formato | Pág. |
|---|---|---|---|
| FRM-NOC100025ND_MD_HD | 0 | A4 | 1 de 1 |

Dimensiones en mm (inch)

Queda prohibida la preproducción total o parcial de este documento
y del contenido del mismo sin la autorización escrita de Karl Dungs S.L.U.
Todos los derechos reservados.

## ESPECIFICACIONES TÉCNICAS / TECHNICAL SPECIFICATION

DUNGS®
Combustion Controls

Regulador de presión con válvula de seguridad, conforme a las normas EN-334 y EN-14382 /
Pressure regulator with safety shut-off valve, in accordance with the standards EN-334 and EN-14382

| | |
|---|---|
| Presión de operación / Operating pressure | Max. 10 Bar / 1000 kPa / 145 Psig |
| Rango de presión de salida FRM / Outlet pressure range FRM | Ver tabla de Selección / See Set point Table |
| Temperatura máxima ambiental / Ambient maximum temperature | 60 ºC / 145ºF |
| Temperatura minima ambiental / Ambient minimum temperature | -20 ºC / -10 ºF |
| Fluido / Flow | Gas Natural, GLP / Natural Gas, LPG |
| Posición de montaje / Mounting Position | 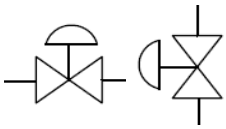 *Puede variar el tarado para presiones inferiores a 300 mbar / for pressures below 300 mbar setpoint can be altered |
| Tipo de Construcción / Construction Type: | DS (De resistencia diferencial) / DS (Diferential strenght) |
| Materiales / Materials — Cuerpo / Body | Hierro fundido / Cast iron EN GJS 500-7 or EN GJS 400-15 |
| Actuador / Actuator | Aluminio / Aluminium |
| Membranas / Membranes | NBR EN549 conform |
| Diametro Nominal / Nominal Diameter | Bridas de conexión PN 25 según EN1092-1 / Connecting flange PN 25 according to EN1092-1 DN 25 |

| Codigo de producto / Product's code | BSP / SAV | BSP | NPT / SAV | NPT |
|---|---|---|---|---|
| | 279074 | 279086 | 280249 | 280107 |

Producto diseñado acorde a las normas EN-334 y EN-14382 / Product designed in accordance to EN-334 and EN-14382
Categoría III (Regulador) y IV (Válvula de seguridad) acorde a PED 2014/68/UE & CRN B51.14 pendiente
Product category III (Regulator) and IV (Safety valve) according to PED 2014/68/UE & CRN B51.14 pending

| Muelle de regulación / Regulation spring | | | | | | | | | | | |
|---|---|---|---|---|---|---|---|---|---|---|---|
| Ø hilo / wire | Rango / Range (min-Max) | | | | | | | | | Color/Color | codigo/code |
| 3,2 | 80 | 150 | (mbar) | 8 | 15 | (kPa) | 30 | 2,2 | ("WC) | blanco/white | 287676 |
| 3,5 | 100 | 200 | (mbar) | 10 | 20 | (kPa) | 40 | 2,9 | ("WC) | amarillo/yellow | 287279 |
| 3,7 | 130 | 250 | (mbar) | 13 | 25 | (kPa) | 1,9 | 3,6 | (psig) | azul/blue | 287280 |
| 4 | 180 | 350 | (mbar) | 18 | 35 | (kPa) | 2,6 | 5,1 | (psig) | negro/black | 287284 |
| 4,3 | 200 | 400 | (mbar) | 20 | 40 | (kPa) | 2,9 | 5,8 | (psig) | lila/purple | 287287 |

| Muelle de mínima presión / Under pressure spring (UPSO) | | | | | | | | | | | |
|---|---|---|---|---|---|---|---|---|---|---|---|
| Ø hilo / wire | Rango / Range (min-Max) | | | | | | | | | Color/Color | codigo/code |
| 2 | 35 | 110 | (mbar) | 3,5 | 11 | (kPa) | 10 | 40 | ("WC) | lila/purple | 270176 |
| 2,3 | 50 | 250 | (mbar) | 5 | 25 | (kPa) | 20 | 3,6 | ("WC) | naranja/orange | 270177 |
| 2,5 | 80 | 400 | (mbar) | 8 | 40 | (kPa) | 30 | 5,8 | ("WC) | plata/silver | 270178 |

| Muelle de máxima presión / Over pressure spring (OPSO) | | | | | | | | | | | |
|---|---|---|---|---|---|---|---|---|---|---|---|
| Ø hilo / wire | Rango / Range (min-Max) | | | | | | | | | Color/Color | codigo/code |
| 2,5 | 180 | 290 | (mbar) | 18 | 29 | (kPa) | 2,6 | 4,2 | (psig) | azul/blue | 270182 |
| 2,75 | 230 | 370 | (mbar) | 23 | 37 | (kPa) | 3,3 | 5,4 | (psig) | negro/black | 270183 |
| 3,25 | 300 | 500 | (mbar) | 30 | 50 | (kPa) | 4,4 | 7,3 | (psig) | lila/purple | 270184 |
| 3,5 | 400 | 800 | (mbar) | 40 | 80 | (kPa) | 5,8 | 11,6 | (psig) | rosa/pink | 270185 |

| Orificios / Orifices | | | | | | |
|---|---|---|---|---|---|---|
| Medida/size | Ø6 | Ø8 | Ø10 | Ø12 | | |
| $P_{umax}$* (bar/psig) | 10 / 145 | 10 / 145 | 10 / 145 | 10 / 145 | | |

*Máxima presión de entrada / Maximum inlet pressure

Regulador de gas para media presión / Gas regulator for medium pressure

**FRM-NOC 100025 MD / SAV MD**

DUNGS® Combustion Controls

**Tablas de caudal / Flow tables (SI units)**

| Ø6 | Pressures (Bar) vs Flow ($Nm^3/h$) | | | | | | | |
|---|---|---|---|---|---|---|---|---|
| **Pin / Pout** | **0,08** | **0,1** | **0,15** | **0,2** | **0,25** | **0,3** | **0,35** | **0,4** |
| **0,2** | 10 | 9 | 7 | - | - | - | - | - |
| **0,3** | 13 | 13 | 11 | 9 | 7 | - | - | - |
| **0,4** | 16 | 16 | 15 | 13 | 12 | 10 | 7 | - |
| **0,5** | 18 | 18 | 17 | 16 | 15 | 14 | 12 | 10 |
| **0,75** | 23 | 23 | 23 | 22 | 21 | 21 | 20 | 19 |
| **1** | 27 | 27 | 27 | 27 | 26 | 26 | 25 | 25 |
| **1,5** | 34 | 34 | 34 | 34 | 34 | 34 | 34 | 34 |
| **2** | 41 | 41 | 41 | 41 | 41 | 41 | 41 | 41 |
| **3** | 54 | 54 | 54 | 54 | 54 | 54 | 54 | 54 |
| **4** | 68 | 68 | 68 | 68 | 68 | 68 | 68 | 68 |
| **5** | 81 | 81 | 81 | 81 | 81 | 81 | 81 | 81 |
| **6** | 95 | 95 | 95 | 95 | 95 | 95 | 95 | 95 |
| **7** | 108 | 108 | 108 | 108 | 108 | 108 | 108 | 108 |
| **8** | 122 | 122 | 122 | 122 | 122 | 122 | 122 | 122 |
| **9** | 135 | 135 | 135 | 135 | 135 | 135 | 135 | 135 |
| **10** | 149 | 149 | 149 | 149 | 149 | 149 | 149 | 149 |

*Datos en azul corresponden a toma externa / Values in blue correspond to external impulse

d=0,83 $Kg/m^3$ AC 10

| Ø8 | Pressures (Bar) vs Flow ($Nm^3/h$) | | | | | | | |
|---|---|---|---|---|---|---|---|---|
| **Pin / Pout** | **0,08** | **0,1** | **0,15** | **0,2** | **0,25** | **0,3** | **0,35** | **0,4** |
| **0,2** | 21 | 19 | 14 | - | - | - | - | - |
| **0,3** | 28 | 27 | 24 | 20 | 14 | - | - | - |
| **0,4** | 34 | 33 | 31 | 28 | 25 | 21 | 15 | - |
| **0,5** | 39 | 38 | 36 | 34 | 32 | 29 | 26 | 21 |
| **0,75** | 49 | 48 | 48 | 47 | 45 | 44 | 42 | 40 |
| **1** | 57 | 57 | 57 | 56 | 55 | 55 | 54 | 52 |
| **1,5** | 72 | 72 | 72 | 72 | 72 | 72 | 71 | 71 |
| **2** | 86 | 86 | 86 | 86 | 86 | 86 | 86 | 86 |
| **3** | 114 | 114 | 114 | 114 | 114 | 114 | 114 | 114 |
| **4** | 143 | 143 | 143 | 143 | 143 | 143 | 143 | 143 |
| **5** | 171 | 171 | 171 | 171 | 171 | 171 | 171 | 171 |
| **6** | 200 | 200 | 200 | 200 | 200 | 200 | 200 | 200 |
| **7** | 228 | 228 | 228 | 228 | 228 | 228 | 228 | 228 |
| **8** | 257 | 257 | 257 | 257 | 257 | 257 | 257 | 257 |
| **9** | 285 | 285 | 285 | 285 | 285 | 285 | 285 | 285 |
| **10** | 314 | 314 | 314 | 314 | 314 | 314 | 314 | 314 |

*Datos en azul corresponden a toma externa / Values in blue correspond to external impulse

d=0,83 $Kg/m^3$ AC 10

DUNGS® Combustion Controls

**Tablas de caudal / Flow tables (SI units)**

| Ø10 | Pressures (Bar) vs Flow ($Nm^3/h$) | | | | | | | |
|---|---|---|---|---|---|---|---|---|
| **Pin / Pout** | **0,08** | **0,1** | **0,15** | **0,2** | **0,25** | **0,3** | **0,35** | **0,4** |
| **0,2** | 27 | 25 | 18 | - | - | - | - | - |
| **0,3** | 37 | 36 | 31 | 26 | 19 | - | - | - |
| **0,4** | 45 | 44 | 41 | 37 | 33 | 27 | 20 | - |
| **0,5** | 51 | 50 | 48 | 46 | 42 | 39 | 34 | 28 |
| **0,75** | 65 | 64 | 63 | 62 | 60 | 58 | 56 | 53 |
| **1** | 76 | 76 | 76 | 75 | 74 | 73 | 72 | 70 |
| **1,5** | 96 | 96 | 96 | 96 | 96 | 96 | 96 | 95 |
| **2** | 116 | 116 | 116 | 116 | 116 | 116 | 116 | 116 |
| **3** | 157 | 157 | 157 | 157 | 157 | 157 | 157 | 157 |
| **4** | 198 | 198 | 198 | 198 | 198 | 198 | 198 | 198 |
| **5** | 241 | 241 | 241 | 241 | 241 | 241 | 241 | 241 |
| **6** | 284 | 284 | 284 | 284 | 284 | 284 | 284 | 284 |
| **7** | 329 | 329 | 329 | 329 | 329 | 329 | 329 | 329 |
| **8** | 374 | 374 | 374 | 374 | 374 | 374 | 374 | 374 |
| **9** | 0 | 421 | 421 | 421 | 421 | 421 | 421 | 421 |
| **10** | 0 | 0 | 468 | 468 | 468 | 468 | 468 | 468 |

*Datos en azul corresponden a toma externa / Values in blue correspond to external impulse

d=0,83Kg/$m^3$ AC 10

| Ø12 | Pressures (Bar) vs Flow ($Nm^3/h$) | | | | | | | |
|---|---|---|---|---|---|---|---|---|
| **Pin / Pout** | **0,08** | **0,1** | **0,15** | **0,2** | **0,25** | **0,3** | **0,35** | **0,4** |
| **0,2** | 41 | 38 | 28 | - | - | - | - | - |
| **0,3** | 56 | 54 | 48 | 40 | 29 | - | - | - |
| **0,4** | 67 | 66 | 61 | 56 | 50 | 41 | 30 | - |
| **0,5** | 77 | 76 | 72 | 68 | 64 | 58 | 51 | 43 |
| **0,75** | 96 | 96 | 94 | 92 | 90 | 87 | 83 | 79 |
| **1** | 112 | 112 | 111 | 110 | 109 | 107 | 105 | 103 |
| **1,5** | 139 | 139 | 139 | 139 | 139 | 139 | 138 | 138 |
| **2** | 164 | 164 | 164 | 164 | 164 | 164 | 164 | 164 |
| **3** | 213 | 213 | 213 | 213 | 213 | 213 | 213 | 213 |
| **4** | 258 | 258 | 258 | 258 | 258 | 258 | 258 | 258 |
| **5** | 301 | 301 | 301 | 301 | 301 | 301 | 301 | 301 |
| **6** | 0 | 340 | 340 | 340 | 340 | 340 | 340 | 340 |
| **7** | 0 | 0 | 377 | 377 | 377 | 377 | 377 | 377 |
| **8** | 0 | 0 | 0 | 505 | 505 | 505 | 505 | 505 |
| **9** | 0 | 0 | 0 | 0 | 561 | 561 | 561 | 561 |
| **10** | 0 | 0 | 0 | 0 | 0 | 617 | 617 | 617 |

*Datos en azul corresponden a toma externa / Values in blue correspond to external impulse

d=0,83 Kg/$m^3$ AC 10

DUNGS®
Combustion Controls

**Tablas de caudal / Flow tables (Imperial units)**

| Ø6 | Pressures (Psig/"WC) vs Flow (SCFH) | | | | | | | |
|---|---|---|---|---|---|---|---|---|
| **Pin / Pout** | **32 "WC** | **40 "WC** | **60 "WC** | **80 "WC** | **100 "WC** | **121 "WC** | **141 "WC** | **161 "WC** |
| **3 Psig** | 345 | 318 | 230 | - | - | - | - | - |
| **4 Psig** | 468 | 450 | 398 | 332 | 240 | - | - | - |
| **6 Psig** | 564 | 551 | 514 | 470 | 415 | 345 | 249 | - |
| **7 Psig** | 646 | 636 | 608 | 575 | 536 | 489 | 431 | 358 |
| **11 Psig** | 816 | 811 | 796 | 779 | 758 | 733 | 704 | 670 |
| **15 Psig** | 956 | 954 | 948 | 939 | 928 | 914 | 897 | 878 |
| **22 Psig** | 1198 | 1198 | 1198 | 1198 | 1198 | 1197 | 1194 | 1189 |
| **29 Psig** | 1436 | 1436 | 1436 | 1436 | 1436 | 1436 | 1436 | 1436 |
| **44 Psig** | 1913 | 1913 | 1913 | 1913 | 1913 | 1913 | 1913 | 1913 |
| **58 Psig** | 2390 | 2390 | 2390 | 2390 | 2390 | 2390 | 2390 | 2390 |
| **73 Psig** | 2866 | 2866 | 2866 | 2866 | 2866 | 2866 | 2866 | 2866 |
| **87 Psig** | 3343 | 3343 | 3343 | 3343 | 3343 | 3343 | 3343 | 3343 |
| **102 Psig** | 3820 | 3820 | 3820 | 3820 | 3820 | 3820 | 3820 | 3820 |
| **116 Psig** | 4296 | 4296 | 4296 | 4296 | 4296 | 4296 | 4296 | 4296 |
| **131 Psig** | 4773 | 4773 | 4773 | 4773 | 4773 | 4773 | 4773 | 4773 |
| **145 Psig** | 5250 | 5250 | 5250 | 5250 | 5250 | 5250 | 5250 | 5250 |

*Datos en azul corresponden a toma externa / Values in blue correspond to external impulse

d=0,05 lb/ft$^3$ AC 10

| Ø8 | Pressures (Psig/"WC) vs Flow (SCFH) | | | | | | | |
|---|---|---|---|---|---|---|---|---|
| **Pin / Pout** | **32 "WC** | **40 "WC** | **60 "WC** | **80 "WC** | **100 "WC** | **121 "WC** | **141 "WC** | **161 "WC** |
| **3 Psig** | 729 | 671 | 485 | - | - | - | - | - |
| **4 Psig** | 987 | 950 | 841 | 701 | 506 | - | - | - |
| **6 Psig** | 1190 | 1163 | 1085 | 991 | 876 | 729 | 525 | - |
| **7 Psig** | 1364 | 1343 | 1284 | 1214 | 1131 | 1031 | 910 | 757 |
| **11 Psig** | 1722 | 1712 | 1681 | 1644 | 1599 | 1547 | 1486 | 1415 |
| **15 Psig** | 2018 | 2014 | 2001 | 1983 | 1959 | 1930 | 1894 | 1853 |
| **22 Psig** | 2529 | 2529 | 2529 | 2529 | 2529 | 2526 | 2520 | 2509 |
| **29 Psig** | 3032 | 3032 | 3032 | 3032 | 3032 | 3032 | 3032 | 3032 |
| **44 Psig** | 4039 | 4039 | 4039 | 4039 | 4039 | 4039 | 4039 | 4039 |
| **58 Psig** | 5045 | 5045 | 5045 | 5045 | 5045 | 5045 | 5045 | 5045 |
| **73 Psig** | 6051 | 6051 | 6051 | 6051 | 6051 | 6051 | 6051 | 6051 |
| **87 Psig** | 7058 | 7058 | 7058 | 7058 | 7058 | 7058 | 7058 | 7058 |
| **102 Psig** | 8064 | 8064 | 8064 | 8064 | 8064 | 8064 | 8064 | 8064 |
| **116 Psig** | 9070 | 9070 | 9070 | 9070 | 9070 | 9070 | 9070 | 9070 |
| **131 Psig** | 10077 | 10077 | 10077 | 10077 | 10077 | 10077 | 10077 | 10077 |
| **145 Psig** | 11083 | 11083 | 11083 | 11083 | 11083 | 11083 | 11083 | 11083 |

*Datos en azul corresponden a toma externa / Values in blue correspond to external impulse

d=0,05 lb/ft$^3$ AC 10

DUNGS®
Combustion Controls

**Tablas de caudal / Flow tables (Imperial units)**

| Ø10 | Pressures (Psig/"WC) vs Flow (SCFH) | | | | | | | |
|---|---|---|---|---|---|---|---|---|
| **Pin / Pout** | **32 "WC** | **40 "WC** | **60 "WC** | **80 "WC** | **100 "WC** | **121 "WC** | **141 "WC** | **161 "WC** |
| **3 Psig** | 962 | 886 | 640 | - | - | - | - | - |
| **4 Psig** | 1304 | 1254 | 1111 | 926 | 668 | - | - | - |
| **6 Psig** | 1575 | 1538 | 1436 | 1311 | 1159 | 965 | 695 | - |
| **7 Psig** | 1806 | 1779 | 1701 | 1608 | 1498 | 1366 | 1205 | 1002 |
| **11 Psig** | 2289 | 2275 | 2234 | 2185 | 2126 | 2056 | 1975 | 1881 |
| **15 Psig** | 2691 | 2686 | 2668 | 2644 | 2612 | 2573 | 2526 | 2471 |
| **22 Psig** | 3394 | 3394 | 3394 | 3394 | 3394 | 3391 | 3382 | 3368 |
| **29 Psig** | 4096 | 4096 | 4096 | 4096 | 4096 | 4096 | 4096 | 4096 |
| **44 Psig** | 5526 | 5526 | 5526 | 5526 | 5526 | 5526 | 5526 | 5526 |
| **58 Psig** | 6992 | 6992 | 6992 | 6992 | 6992 | 6992 | 6992 | 6992 |
| **73 Psig** | 8493 | 8493 | 8493 | 8493 | 8493 | 8493 | 8493 | 8493 |
| **87 Psig** | 10029 | 10029 | 10029 | 10029 | 10029 | 10029 | 10029 | 10029 |
| **102 Psig** | 11601 | 11601 | 11601 | 11601 | 11601 | 11601 | 11601 | 11601 |
| **116 Psig** | 13208 | 13208 | 13208 | 13208 | 13208 | 13208 | 13208 | 13208 |
| **131 Psig** | 0 | 14850 | 14850 | 14850 | 14850 | 14850 | 14850 | 14850 |
| **145 Psig** | 0 | 0 | 16527 | 16527 | 16527 | 16527 | 16527 | 16527 |

*Datos en azul corresponden a toma externa / Values in blue correspond to external impulse

d=0,05 lb/ft$^3$ AC 10

| Ø12 | Pressures (Psig/"WC) vs Flow (SCFH) | | | | | | | |
|---|---|---|---|---|---|---|---|---|
| **Pin / Pout** | **32 "WC** | **40 "WC** | **60 "WC** | **80 "WC** | **100 "WC** | **121 "WC** | **141 "WC** | **161 "WC** |
| **3 Psig** | 1463 | 1348 | 974 | - | - | - | - | - |
| **4 Psig** | 1976 | 1901 | 1683 | 1403 | 1012 | - | - | - |
| **6 Psig** | 2376 | 2322 | 2167 | 1979 | 1749 | 1456 | 1049 | - |
| **7 Psig** | 2715 | 2674 | 2557 | 2418 | 2252 | 2054 | 1812 | 1507 |
| **11 Psig** | 3407 | 3386 | 3326 | 3252 | 3164 | 3060 | 2940 | 2800 |
| **15 Psig** | 3966 | 3958 | 3932 | 3896 | 3849 | 3791 | 3722 | 3641 |
| **22 Psig** | 4903 | 4903 | 4903 | 4903 | 4903 | 4898 | 4885 | 4864 |
| **29 Psig** | 5798 | 5798 | 5798 | 5798 | 5798 | 5798 | 5798 | 5798 |
| **44 Psig** | 7510 | 7510 | 7510 | 7510 | 7510 | 7510 | 7510 | 7510 |
| **58 Psig** | 9116 | 9116 | 9116 | 9116 | 9116 | 9116 | 9116 | 9116 |
| **73 Psig** | 10616 | 10616 | 10616 | 10616 | 10616 | 10616 | 10616 | 10616 |
| **87 Psig** | 0 | 12010 | 12010 | 12010 | 12010 | 12010 | 12010 | 12010 |
| **102 Psig** | 0 | 0 | 13298 | 13298 | 13298 | 13298 | 13298 | 13298 |
| **116 Psig** | 0 | 0 | 0 | 17822 | 17822 | 17822 | 17822 | 17822 |
| **131 Psig** | 0 | 0 | 0 | 0 | 19800 | 19800 | 19800 | 19800 |
| **145 Psig** | 0 | 0 | 0 | 0 | 0 | 21777 | 21777 | 21777 |

*Datos en azul corresponden a toma externa / Values in blue correspond to external impulse

d=0,05 lb/ft$^3$ AC 10

Plano CAD, no cambiar manualmente!
CAD-Drawing, do not change manually!

This design and/or document is proprietary and protected by copyright.
It may not, without our prior express consent, be copied nor transmitted
to any third party. It must be returned to us upon discharge of the order.

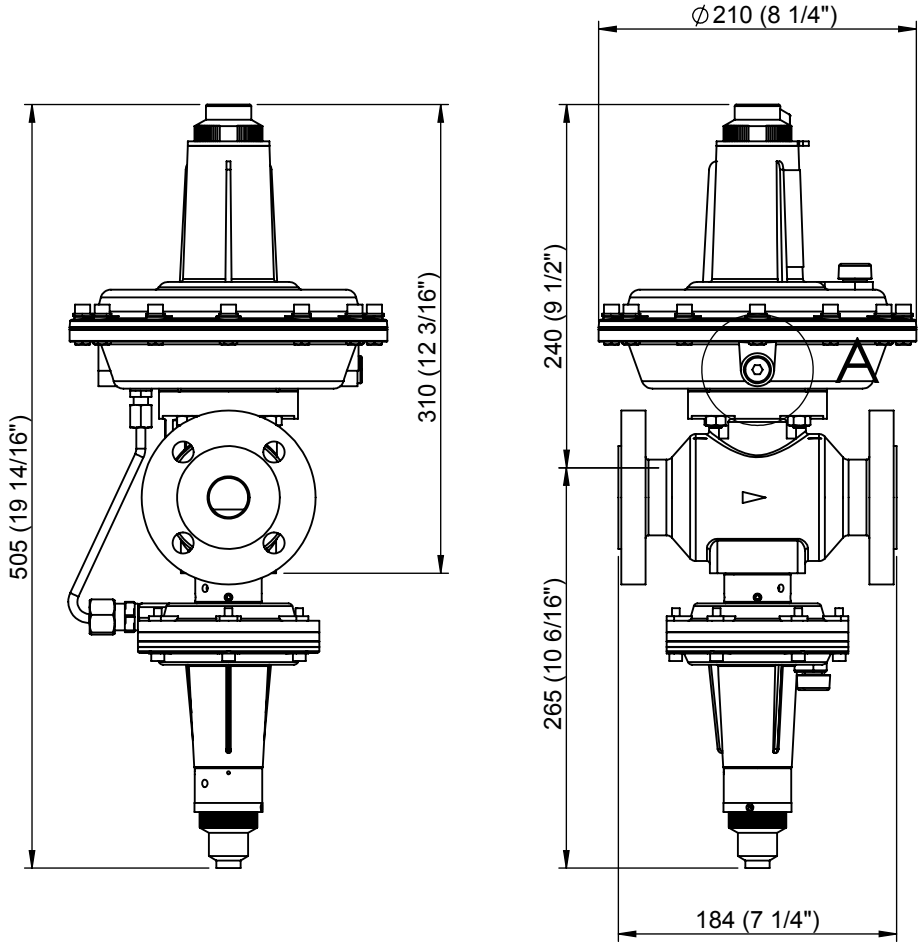


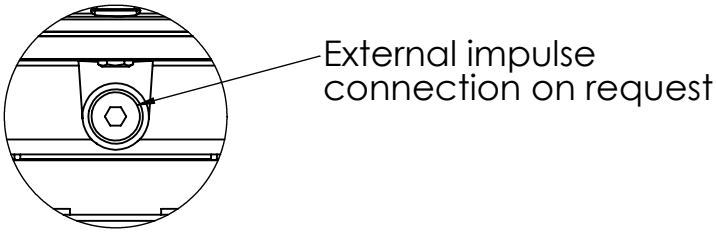


DETALLE A
ESCALA 2 : 5

3D

| Rev | Descripción Modificación | Fecha | Nom |
|---|---|---|---|
| | | | |

**Karl Dungs S.L.U.**
**Combustion Controls**
Avinguda de Can Roqueta, 15 - Pol. Can Roqueta
E-08202 - Sabadell
Barcelona - ESPAÑA

| | Fecha | Nombre | Firmado |
|---|---|---|---|
| Dibujado | 31/10/2018 | A.Rof | |
| Verificado | 31/10/2018 | J.Inglés | |
| Aprobado | 31/10/2018 | GX | |

Tolerancias según ISO 2768
TOLERANCIAS GENERALES ISO 2768-mK
(MEDIUM) TOLERANCIAS LINEALES
Roscas a 6g/6H y longitudes +1.0/-0

Rz 12.5 ( )

Eliminar rebabas y cantos vivos

Escala: 1:5

Material:

Acabado:

Tratamiento:

Peso: 11415.24 gr.

Descripción:
DIMENSIONS FRM-NOC100025ND/MD/HD

| Código Pieza | Rev. | Formato | Pág. |
|---|---|---|---|
| FRM-NOC100025ND_MD_HD | 0 | A4 | 1 de 1 |

Dimensiones en mm (inch)

Queda prohibida la preproducción total o parcial de este documento
y del contenido del mismo sin la autorización escrita de Karl Dungs S.L.U.
Todos los derechos reservados.

ESPECIFICACIONES TÉCNICAS / TECHNICAL SPECIFICATION

DUNGS®
Combustion Controls

Regulador de presión con válvula de seguridad, conforme a las normas EN-334 y EN-14382 /
Pressure regulator with safety shut-off valve, in accordance with the standards EN-334 and EN-14382

| | |
|---|---|
| Presión de operación / Operating pressure | Max. 10 Bar / 1000 kPa / 145 Psig |
| Rango de presión de salida FRM / Outlet pressure range FRM | Ver tabla de Selección / See Set point Table |
| Temperatura máxima ambiental / Ambient maximum temperature | 60 ºC / 145ºF |
| Temperatura minima ambiental / Ambient minimum temperature | -20 ºC / -10 ºF |
| Fluido / Flow | Gas Natural, GLP / Natural Gas, LPG |
| Posición de montaje / Mounting Position | 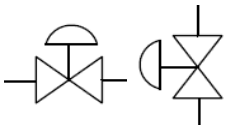 *Puede variar el tarado para presiones inferiores a 300 mbar / for pressures below 300 mbar setpoint can be altered |
| Tipo de Construcción / Construction Type: | DS (De resistencia diferencial) / DS (Diferential strenght) |
| Materiales / Materials — Cuerpo / Body | Hierro fundido / Cast iron EN GJS 500-7 or EN GJS 400-15 |
| Actuador / Actuator | Aluminio / Aluminium |
| Membranas / Membranes | NBR EN549 conform |
| Diametro Nominal / Nominal Diameter | Bridas de conexión PN 25 según EN1092-1 / Connecting flange PN 25 according to EN1092-1 DN 25 |

| Codigo de producto / Product's code | BSP / SAV | BSP | NPT / SAV | NPT |
|---|---|---|---|---|
| | 279075 | 279087 | 280250 | 280262 |

Producto diseñado acorde a las normas EN-334 y EN-14382 / Product designed in accordance to EN-334 and EN-14382
Categoría III (Regulador) y IV (Válvula de seguridad) acorde a PED 2014/68/UE & CRN B51.14 pendiente
Product category III (Regulator) and IV (Safety valve) according to PED 2014/68/UE & CRN B51.14 pending

| Muelle de regulación / Regulation spring | | | | | | | | | | | |
|---|---|---|---|---|---|---|---|---|---|---|---|
| Ø hilo / wire | Rango / Range (min-Max) | | | | | | | | | Color/Color | codigo/code |
| 4,5 | 300 | 500 | (mbar) | 30 | 50 | (kPa) | 4,4 | 7,3 | (psig) | blanco/white | 286355 |
| 5 | 450 | 700 | (mbar) | 45 | 70 | (kPa) | 6,5 | 10,2 | (psig) | amarillo/yellow | 286356 |
| 5,5 | 550 | 900 | (mbar) | 55 | 90 | (kPa) | 8 | 13,1 | (psig) | azul/blue | 286357 |
| 6 | 650 | 1150 | (mbar) | 65 | 115 | (kPa) | 9,4 | 16,7 | (psig) | negro/black | 286358 |
| 6,5 | 1000 | 1500 | (mbar) | 100 | 150 | (kPa) | 14,5 | 21,8 | (psig) | lila/purple | 286359 |

| Muelle de mínima presión / Under pressure spring (UPSO) | | | | | | | | | | | |
|---|---|---|---|---|---|---|---|---|---|---|---|
| Ø hilo / wire | Rango / Range (min-Max) | | | | | | | | | Color/Color | codigo/code |
| 2,5 | 150 | 500 | (mbar) | 15 | 50 | (kPa) | 2,2 | 7,3 | (psig) | lila/purple | 270178 |
| 2,8 | 300 | 1000 | (mbar) | 30 | 100 | (kPa) | 4,4 | 14,5 | (psig) | naranja/orange | 270179 |
| 3 | 800 | 1400 | (mbar) | 80 | 140 | (kPa) | 11,6 | 20,3 | (psig) | plata/silver | 270180 |

| Muelle de máxima presión / Over pressure spring (OPSO) | | | | | | | | | | | |
|---|---|---|---|---|---|---|---|---|---|---|---|
| Ø hilo / wire | Rango / Range (min-Max) | | | | | | | | | Color/Color | codigo/code |
| 3,5 | 500 | 1000 | (mbar) | 50 | 100 | (kPa) | 7,3 | 14,5 | (psig) | azul/blue | 270185 |
| 3,75 | 700 | 1300 | (mbar) | 70 | 130 | (kPa) | 10,2 | 18,9 | (psig) | negro/black | 270186 |
| 4 | 1000 | 1800 | (mbar) | 100 | 180 | (kPa) | 14,5 | 26,1 | (psig) | lila/purple | 270187 |
| 4,5 | 1300 | 2500 | (mbar) | 130 | 250 | (kPa) | 18,9 | 36,3 | (psig) | naranja/orange | 270188 |
| 4,8 | 1800 | 3500 | (mbar) | 180 | 350 | (kPa) | 26,1 | 50,8 | (psig) | rosa/pink | 270189 |

| Orificios / Orifices | | | | | | | | | | |
|---|---|---|---|---|---|---|---|---|---|---|
| Medida/size | Ø6 | | Ø8 | | Ø10 | | Ø12 | | | |
| $P_{umax}$* (bar/psig) | 10 | 145 | 10 | 145 | 10 | 145 | 10 | 145 | | |

Regulador de gas para media presión / Gas regulator for medium pressure
FRM-NOC 100025 HD / SAV HD

*Máxima presión de entrada / Maximum inlet pressure

DUNGS®
Combustion Controls

**Tablas de caudal / Flow tables (SI units)**

| Ø6 | Pressures (Bar) vs Flow ($Nm^3/h$) | | | | | | | |
|---|---|---|---|---|---|---|---|---|
| **Pin / Pout** | **0,3** | **0,4** | **0,5** | **0,7** | **0,9** | **1,1** | **1,3** | **1,5** |
| **0,2** | - | - | - | - | - | - | - | - |
| **0,3** | - | - | - | - | - | - | - | - |
| **0,4** | 14 | - | - | - | - | - | - | - |
| **0,5** | 19 | 14 | - | - | - | - | - | - |
| **0,75** | 29 | 27 | 23 | 11 | - | - | - | - |
| **1** | 36 | 35 | 33 | 27 | 17 | - | - | - |
| **1,5** | 48 | 47 | 47 | 44 | 41 | 35 | 26 | - |
| **2** | 57 | 57 | 57 | 57 | 55 | 52 | 48 | 43 |
| **3** | 76 | 76 | 76 | 76 | 76 | 76 | 75 | 74 |
| **4** | 95 | 95 | 95 | 95 | 95 | 95 | 95 | 95 |
| **5** | 114 | 114 | 114 | 114 | 114 | 114 | 114 | 114 |
| **6** | 133 | 133 | 133 | 133 | 133 | 133 | 133 | 133 |
| **7** | 152 | 152 | 152 | 152 | 152 | 152 | 152 | 152 |
| **8** | 171 | 171 | 171 | 171 | 171 | 171 | 171 | 171 |
| **9** | 190 | 190 | 190 | 190 | 190 | 190 | 190 | 190 |
| **10** | 209 | 209 | 209 | 209 | 209 | 209 | 209 | 209 |

*Datos en azul corresponden a toma externa / Values in blue correspond to external impulse

d=0,83 $Kg/m^3$ AC 10

| Ø8 | Pressures (Bar) vs Flow ($Nm^3/h$) | | | | | | | |
|---|---|---|---|---|---|---|---|---|
| **Pin / Pout** | **0,3** | **0,4** | **0,5** | **0,7** | **0,9** | **1,1** | **1,3** | **1,5** |
| **0,2** | - | - | - | - | - | - | - | - |
| **0,3** | - | - | - | - | - | - | - | - |
| **0,4** | 25 | - | - | - | - | - | - | - |
| **0,5** | 35 | 26 | - | - | - | - | - | - |
| **0,75** | 52 | 48 | 42 | 20 | - | - | - | - |
| **1** | 65 | 63 | 59 | 49 | 30 | - | - | - |
| **1,5** | 85 | 85 | 84 | 80 | 73 | 63 | 46 | - |
| **2** | 102 | 102 | 102 | 101 | 99 | 94 | 87 | 76 |
| **3** | 136 | 136 | 136 | 136 | 136 | 136 | 135 | 132 |
| **4** | 170 | 170 | 170 | 170 | 170 | 170 | 170 | 170 |
| **5** | 204 | 204 | 204 | 204 | 204 | 204 | 204 | 204 |
| **6** | 238 | 238 | 238 | 238 | 238 | 238 | 238 | 238 |
| **7** | 272 | 272 | 272 | 272 | 272 | 272 | 272 | 272 |
| **8** | 306 | 306 | 306 | 306 | 306 | 306 | 306 | 306 |
| **9** | 340 | 340 | 340 | 340 | 340 | 340 | 340 | 340 |
| **10** | 374 | 374 | 374 | 374 | 374 | 374 | 374 | 374 |

*Datos en azul corresponden a toma externa / Values in blue correspond to external impulse

d=0,83 $Kg/m^3$ AC 10

DUNGS®
Combustion Controls

**Tablas de caudal / Flow tables (SI units)**

| Ø10 | Pressures (Bar) vs Flow ($Nm^3/h$) | | | | | | | |
|---|---|---|---|---|---|---|---|---|
| **Pin / Pout** | **0,3** | **0,4** | **0,5** | **0,7** | **0,9** | **1,1** | **1,3** | **1,5** |
| **0,2** | - | - | - | - | - | - | - | - |
| **0,3** | - | - | - | - | - | - | - | - |
| **0,4** | 35 | - | - | - | - | - | - | - |
| **0,5** | 50 | 36 | - | - | - | - | - | - |
| **0,75** | 75 | 68 | 60 | 28 | - | - | - | - |
| **1** | 93 | 89 | 84 | 70 | 42 | - | - | - |
| **1,5** | 122 | 121 | 119 | 114 | 104 | 89 | 66 | - |
| **2** | 146 | 146 | 146 | 145 | 141 | 134 | 123 | 108 |
| **3** | 195 | 195 | 195 | 195 | 195 | 194 | 192 | 187 |
| **4** | 243 | 243 | 243 | 243 | 243 | 243 | 242 | 242 |
| **5** | 292 | 292 | 292 | 292 | 292 | 292 | 291 | 290 |
| **6** | 340 | 340 | 340 | 340 | 340 | 340 | 339 | 338 |
| **7** | 389 | 389 | 389 | 389 | 389 | 389 | 387 | 386 |
| **8** | 437 | 437 | 437 | 437 | 437 | 437 | 436 | 435 |
| **9** | 486 | 486 | 486 | 486 | 486 | 486 | 484 | 483 |
| **10** | 534 | 534 | 534 | 534 | 534 | 534 | 532 | 531 |

*Datos en azul corresponden a toma externa / Values in blue correspond to external impulse

d=0,83 $Kg/m^3$ AC 10

| Ø12 | Pressures (Bar) vs Flow ($Nm^3/h$) | | | | | | | |
|---|---|---|---|---|---|---|---|---|
| **Pin / Pout** | **0,3** | **0,4** | **0,5** | **0,7** | **0,9** | **1,1** | **1,3** | **1,5** |
| **0,2** | - | - | - | - | - | - | - | - |
| **0,3** | - | - | - | - | - | - | - | - |
| **0,4** | 44 | - | - | - | - | - | - | - |
| **0,5** | 63 | 45 | - | - | - | - | - | - |
| **0,75** | 93 | 83 | 72 | 34 | - | - | - | - |
| **1** | 115 | 108 | 101 | 82 | 49 | - | - | - |
| **1,5** | 148 | 144 | 140 | 131 | 119 | 102 | 75 | - |
| **2** | 174 | 170 | 168 | 164 | 158 | 149 | 137 | 121 |
| **3** | 223 | 218 | 215 | 212 | 210 | 209 | 206 | 201 |
| **4** | 267 | 261 | 258 | 254 | 252 | 251 | 250 | 249 |
| **5** | 307 | 300 | 296 | 292 | 290 | 288 | 287 | 286 |
| **6** | 427 | 417 | 412 | 406 | 402 | 400 | 399 | 398 |
| **7** | 488 | 477 | 471 | 464 | 460 | 457 | 456 | 455 |
| **8** | 549 | 536 | 529 | 522 | 517 | 515 | 513 | 511 |
| **9** | 0 | 0 | 0 | 579 | 575 | 572 | 570 | 568 |
| **10** | 0 | 0 | 0 | 0 | 632 | 629 | 627 | 625 |

*Datos en azul corresponden a toma externa / Values in blue correspond to external impulse

d=0,83 $Kg/m^3$ AC 10

DUNGS®
Combustion Controls

**Tablas de caudal / Flow tables (Imperial units)**

| Ø6 | Pressures (Psig/"WC) vs Flow (SCFH) | | | | | | | |
|---|---|---|---|---|---|---|---|---|
| **Pin / Pout** | **4 Psig** | **6 Psig** | **7 Psig** | **10 Psig** | **13 Psig** | **16 Psig** | **19 Psig** | **22 Psig** |
| **3 Psig** | - | - | - | - | - | - | - | - |
| **4 Psig** | - | - | - | - | - | - | - | - |
| **6 Psig** | 486 | - | - | - | - | - | - | - |
| **7 Psig** | 688 | 504 | - | - | - | - | - | - |
| **11 Psig** | 1031 | 944 | 825 | 393 | - | - | - | - |
| **15 Psig** | 1286 | 1235 | 1167 | 962 | 587 | - | - | - |
| **22 Psig** | 1684 | 1673 | 1650 | 1571 | 1438 | 1234 | 913 | - |
| **29 Psig** | 2021 | 2021 | 2021 | 2002 | 1946 | 1850 | 1707 | 1504 |
| **44 Psig** | 2692 | 2692 | 2692 | 2692 | 2692 | 2689 | 2661 | 2605 |
| **58 Psig** | 3363 | 3363 | 3363 | 3363 | 3363 | 3363 | 3363 | 3363 |
| **73 Psig** | 4034 | 4034 | 4034 | 4034 | 4034 | 4034 | 4034 | 4034 |
| **87 Psig** | 4705 | 4705 | 4705 | 4705 | 4705 | 4705 | 4705 | 4705 |
| **102 Psig** | 5376 | 5376 | 5376 | 5376 | 5376 | 5376 | 5376 | 5376 |
| **116 Psig** | 6047 | 6047 | 6047 | 6047 | 6047 | 6047 | 6047 | 6047 |
| **131 Psig** | 6718 | 6718 | 6718 | 6718 | 6718 | 6718 | 6718 | 6718 |
| **145 Psig** | 7389 | 7389 | 7389 | 7389 | 7389 | 7389 | 7389 | 7389 |

*Datos en azul corresponden a toma externa / Values in blue correspond to external impulse

d=0,05 lb/ft$^3$ AC 10

| Ø8 | Pressures (Psig/"WC) vs Flow (SCFH) | | | | | | | |
|---|---|---|---|---|---|---|---|---|
| **Pin / Pout** | **4 Psig** | **6 Psig** | **7 Psig** | **10 Psig** | **13 Psig** | **16 Psig** | **19 Psig** | **22 Psig** |
| **3 Psig** | - | - | - | - | - | - | - | - |
| **4 Psig** | - | - | - | - | - | - | - | - |
| **6 Psig** | 870 | - | - | - | - | - | - | - |
| **7 Psig** | 1230 | 903 | - | - | - | - | - | - |
| **11 Psig** | 1846 | 1689 | 1477 | 703 | - | - | - | - |
| **15 Psig** | 2302 | 2211 | 2088 | 1721 | 1050 | - | - | - |
| **22 Psig** | 3014 | 2994 | 2953 | 2811 | 2572 | 2207 | 1633 | - |
| **29 Psig** | 3617 | 3617 | 3617 | 3583 | 3483 | 3311 | 3055 | 2692 |
| **44 Psig** | 4818 | 4818 | 4818 | 4818 | 4818 | 4811 | 4761 | 4662 |
| **58 Psig** | 6018 | 6018 | 6018 | 6018 | 6018 | 6018 | 6018 | 6018 |
| **73 Psig** | 7219 | 7219 | 7219 | 7219 | 7219 | 7219 | 7219 | 7219 |
| **87 Psig** | 8420 | 8420 | 8420 | 8420 | 8420 | 8420 | 8420 | 8420 |
| **102 Psig** | 9620 | 9620 | 9620 | 9620 | 9620 | 9620 | 9620 | 9620 |
| **116 Psig** | 10821 | 10821 | 10821 | 10821 | 10821 | 10821 | 10821 | 10821 |
| **131 Psig** | 12021 | 12021 | 12021 | 12021 | 12021 | 12021 | 12021 | 12021 |
| **145 Psig** | 13222 | 13222 | 13222 | 13222 | 13222 | 13222 | 13222 | 13222 |

*Datos en azul corresponden a toma externa / Values in blue correspond to external impulse

d=0,05 lb/ft$^3$ AC 10

DUNGS®
Combustion Controls

**Tablas de caudal / Flow tables (Imperial units)**

| Ø10 | Pressures (Psig/"WC) vs Flow (SCFH) | | | | | | | |
|---|---|---|---|---|---|---|---|---|
| **Pin / Pout** | **4 Psig** | **6 Psig** | **7 Psig** | **10 Psig** | **13 Psig** | **16 Psig** | **19 Psig** | **22 Psig** |
| **3 Psig** | - | - | - | - | - | - | - | - |
| **4 Psig** | - | - | - | - | - | - | - | - |
| **6 Psig** | 1241 | - | - | - | - | - | - | - |
| **7 Psig** | 1755 | 1288 | - | - | - | - | - | - |
| **11 Psig** | 2633 | 2409 | 2107 | 1002 | - | - | - | - |
| **15 Psig** | 3284 | 3154 | 2979 | 2455 | 1498 | - | - | - |
| **22 Psig** | 4299 | 4270 | 4213 | 4010 | 3670 | 3149 | 2322 | - |
| **29 Psig** | 5160 | 5160 | 5160 | 5111 | 4969 | 4723 | 4344 | 3816 |
| **44 Psig** | 6873 | 6873 | 6873 | 6873 | 6873 | 6863 | 6769 | 6610 |
| **58 Psig** | 8585 | 8585 | 8585 | 8585 | 8585 | 8585 | 8556 | 8534 |
| **73 Psig** | 10298 | 10298 | 10298 | 10298 | 10298 | 10298 | 10263 | 10236 |
| **87 Psig** | 12010 | 12010 | 12010 | 12010 | 12010 | 12010 | 11970 | 11938 |
| **102 Psig** | 13723 | 13723 | 13723 | 13723 | 13723 | 13723 | 13676 | 13641 |
| **116 Psig** | 15435 | 15435 | 15435 | 15435 | 15435 | 15435 | 15383 | 15343 |
| **131 Psig** | 17148 | 17148 | 17148 | 17148 | 17148 | 17148 | 17090 | 17045 |
| **145 Psig** | 18861 | 18861 | 18861 | 18861 | 18861 | 18861 | 18797 | 18747 |

*Datos en azul corresponden a toma externa / Values in blue correspond to external impulse

d=0,05 lb/ft$^3$ AC 10

| Ø12 | Pressures (Psig/"WC) vs Flow (SCFH) | | | | | | | |
|---|---|---|---|---|---|---|---|---|
| **Pin / Pout** | **4 Psig** | **6 Psig** | **7 Psig** | **10 Psig** | **13 Psig** | **16 Psig** | **19 Psig** | **22 Psig** |
| **3 Psig** | - | - | - | - | - | - | - | - |
| **4 Psig** | - | - | - | - | - | - | - | - |
| **6 Psig** | 1569 | - | - | - | - | - | - | - |
| **7 Psig** | 2211 | 1586 | - | - | - | - | - | - |
| **11 Psig** | 3287 | 2940 | 2537 | 1189 | - | - | - | - |
| **15 Psig** | 4062 | 3814 | 3555 | 2887 | 1747 | - | - | - |
| **22 Psig** | 5220 | 5069 | 4935 | 4627 | 4200 | 3585 | 2643 | - |
| **29 Psig** | 6146 | 6009 | 5930 | 5787 | 5579 | 5276 | 4851 | 4262 |
| **44 Psig** | 7871 | 7696 | 7594 | 7481 | 7420 | 7371 | 7269 | 7098 |
| **58 Psig** | 9440 | 9229 | 9107 | 8972 | 8898 | 8852 | 8821 | 8798 |
| **73 Psig** | 10851 | 10609 | 10469 | 10313 | 10229 | 10176 | 10139 | 10113 |
| **87 Psig** | 15076 | 14740 | 14546 | 14329 | 14212 | 14138 | 14088 | 14051 |
| **102 Psig** | 17226 | 16842 | 16620 | 16373 | 16239 | 16154 | 16097 | 16055 |
| **116 Psig** | 19376 | 18944 | 18694 | 18416 | 18265 | 18171 | 18106 | 18058 |
| **131 Psig** | 0 | 0 | 0 | 20459 | 20292 | 20187 | 20114 | 20062 |
| **145 Psig** | 0 | 0 | 0 | 0 | 22318 | 22203 | 22123 | 22065 |

*Datos en azul corresponden a toma externa / Values in blue correspond to external impulse

d=0,05 lb/ft$^3$ AC 10

Plano CAD, no cambiar manualmente!
CAD-Drawing, do not change manually!

This design and/or document is proprietary and protected by copyright.
It may not, without our prior express consent, be copied nor transmitted
to any third party. It must be returned to us upon discharge of the order.

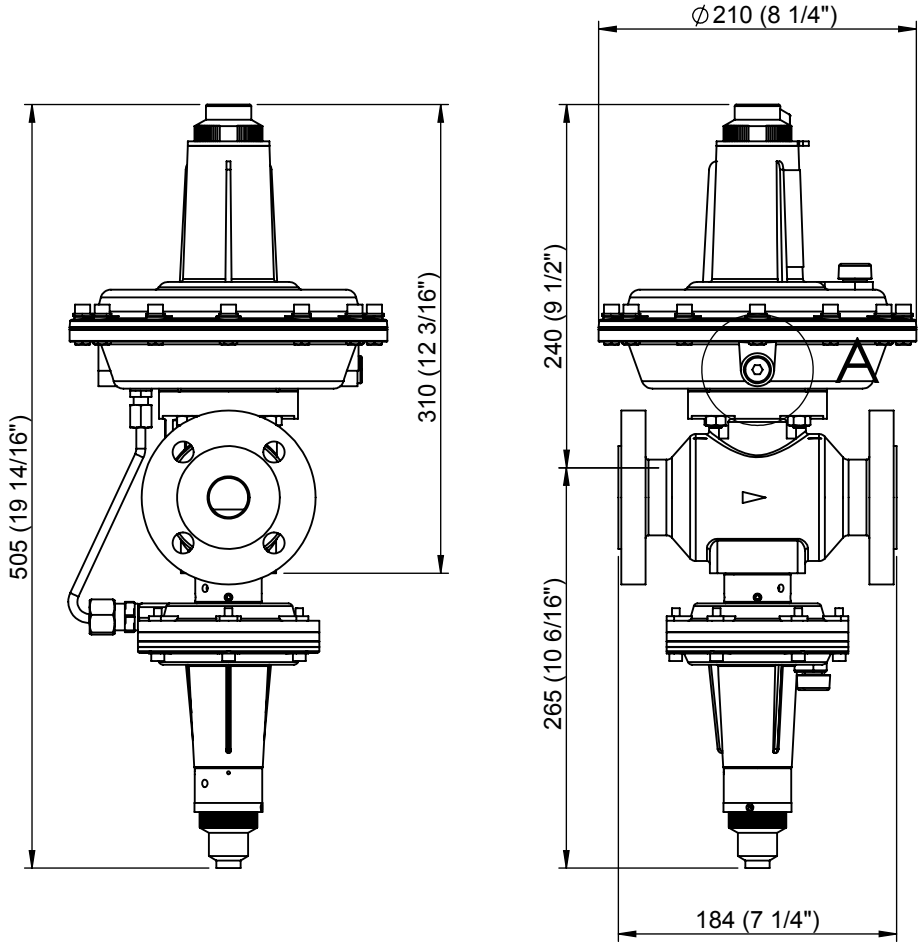


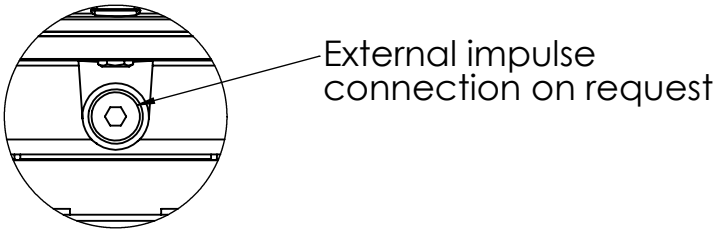


DETALLE A
ESCALA 2 : 5

3D

| Rev | Descripción Modificación | Fecha | Nom |
|---|---|---|---|
| | | | |

**Karl Dungs S.L.U.**
**Combustion Controls**
Avinguda de Can Roqueta, 15 - Pol. Can Roqueta
E-08202 - Sabadell
Barcelona - ESPAÑA

| | Fecha | Nombre | Firmado |
|---|---|---|---|
| Dibujado | 31/10/2018 | A.Rof | |
| Verificado | 31/10/2018 | J.Inglés | |
| Aprobado | 31/10/2018 | GX | |

Tolerancias según ISO 2768
TOLERANCIAS GENERALES ISO 2768-mK
(MEDIUM) TOLERANCIAS LINEALES
Roscas a 6g/6H y longitudes +1.0/-0

Rz 12.5 ( )

Eliminar rebabas y cantos vivos

Escala: 1:5

Material:

Acabado:

Tratamiento:

Peso: 11415.24 gr.

Descripción:
DIMENSIONS FRM-NOC100025ND/MD/HD

| Código Pieza | Rev. | Formato | Pág. |
|---|---|---|---|
| FRM-NOC100025ND_MD_HD | 0 | A4 | 1 de 1 |

Dimensiones en mm (inch)

Queda prohibida la preproducción total o parcial de este documento
y del contenido del mismo sin la autorización escrita de Karl Dungs S.L.U.
Todos los derechos reservados.

## ESPECIFICACIONES TÉCNICAS / TECHNICAL SPECIFICATION

DUNGS®
Combustion Controls

Regulador de presión con válvula de seguridad, conforme a las normas EN-334 y EN-14382 /
Pressure regulator with safety shut-off valve, in accordance with the standards EN-334 and EN-14382

| | |
|---|---|
| Presión de operación / Operating pressure | Max. 10 Bar / 1000 kPa / 145 Psig |
| Rango de presión de salida FRM / Outlet pressure range FRM | Ver tabla de Selección / See Set point Table |
| Temperatura máxima ambiental / Ambient maximum temperature | 60 ºC / 145ºF |
| Temperatura minima ambiental / Ambient minimum temperature | -20 ºC / -10 ºF |
| Fluido / Flow | Gas Natural, GLP / Natural Gas, LPG |
| Posición de montaje / Mounting Position | 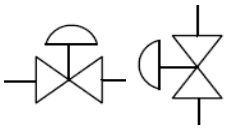 *Puede variar el tarado para presiones inferiores a 300 mbar / for pressures below 300 mbar setpoint can be altered |
| Tipo de Construcción / Construction Type: | DS (De resistencia diferencial) / DS (Diferential strenght) |
| Materiales / Materials — Cuerpo / Body | Hierro fundido / Cast iron EN GJS 500-7 or EN GJS 400-15 |
| Actuador / Actuator | Aluminio / Aluminium |
| Membranas / Membranes | NBR EN549 conform |
| Diametro Nominal / Nominal Diameter | Bridas de conexión PN 25 según EN1092-1<br>Connecting flange PN 25 according to EN1092-1<br>DN 25 |

| Codigo de producto / Product's code | BSP / SAV | BSP | NPT / SAV | NPT |
|---|---|---|---|---|
| | 279076 | 279088 | 280251 | 280263 |

Producto diseñado acorde a las normas EN-334 y EN-14382 / Product designed in accordance to EN-334 and EN-14382
Categoría III (Regulador) y IV (Válvula de seguridad) acorde a PED 2014/68/UE & CRN B51.14 pendiente
Product category III (Regulator) and IV (Safety valve) according to PED 2014/68/UE & CRN B51.14 pending

| Muelle de regulación / Regulation spring | | | | | | | | | | | |
|---|---|---|---|---|---|---|---|---|---|---|---|
| Ø hilo / wire | Rango / Range (min-Max) | | | | | | | | | Color/Color | codigo/code |
| 10 | 1000 | 1600 | (mbar) | 100 | 160 | (kPa) | 14,5 | 23,2 | (psig) | lila/purple | 286389 |
| 11 | 1500 | 2400 | (mbar) | 150 | 240 | (kPa) | 21,8 | 34,8 | (psig) | naranja/orange | 286390 |
| 12 | 3200 | 3600 | (mbar) | 320 | 360 | (kPa) | 46,4 | 52,2 | (psig) | rosa/pink | 286393 |
| 13 | 3500 | 4000 | (mbar) | 350 | 400 | (kPa) | 50,8 | 58 | (psig) | rojo/red | 286394 |

| Muelle de mínima presión / Under pressure spring (UPSO) | | | | | | | | | | | |
|---|---|---|---|---|---|---|---|---|---|---|---|
| Ø hilo / wire | Rango / Range (min-Max) | | | | | | | | | Color/Color | codigo/code |
| 2,5 | 150 | 500 | (mbar) | 15 | 50 | (kPa) | 2,2 | 7,3 | (psig) | lila/purple | 270178 |
| 2,8 | 300 | 1000 | (mbar) | 30 | 100 | (kPa) | 4,4 | 14,5 | (psig) | naranja/orange | 270179 |
| 3 | 800 | 1400 | (mbar) | 80 | 140 | (kPa) | 11,6 | 20,3 | (psig) | plata/silver | 270180 |
| 3,5 | 1200 | 3000 | (mbar) | 120 | 300 | (kPa) | 17,4 | 43,5 | (psig) | rosa/pink | 270124 |

| Muelle de máxima presión / Over pressure spring (OPSO) | | | | | | | | | | | |
|---|---|---|---|---|---|---|---|---|---|---|---|
| Ø hilo / wire | Rango / Range (min-Max) | | | | | | | | | Color/Color | codigo/code |
| 4,5 | 1300 | 2500 | (mbar) | 130 | 250 | (kPa) | 18,9 | 36,3 | (psig) | naranja/orange | 270188 |
| 4,8 | 1800 | 3500 | (mbar) | 180 | 350 | (kPa) | 26,1 | 50,8 | (psig) | rosa/pink | 270189 |
| 5 | 2500 | 5000 | (mbar) | 250 | 500 | (kPa) | 36,3 | 72,5 | (psig) | blanco/white | 271114 |

| Orificios / Orifices | | | | | | | | | | |
|---|---|---|---|---|---|---|---|---|---|---|
| Medida/size | Ø6 | | Ø8 | | Ø10 | | Ø12 | | | |
| $P_{umax}$* (bar/psig) | 10 | 145 | 10 | 145 | 10 | 145 | 10 | 145 | | |

*Máxima presión de entrada / Maximum inlet pressure

Regulador de gas para media presión / Gas regulator for medium pressure
**FRM-NOC 100025UHD / SAV HD**

DUNGS®
Combustion Controls

**Tablas de caudal / Flow tables (SI units)**

| Ø6 | Pressures (Bar) vs Flow ($Nm^3/h$) | | | | | | | |
|---|---|---|---|---|---|---|---|---|
| **Pin / Pout** | **1** | **1,25** | **1,5** | **1,75** | **2** | **2,5** | **3** | **4** |
| **0,2** | - | - | - | - | - | - | - | - |
| **0,3** | - | - | - | - | - | - | - | - |
| **0,4** | - | - | - | - | - | - | - | - |
| **0,5** | - | - | - | - | - | - | - | - |
| **0,75** | - | - | - | - | - | - | - | - |
| **1** | - | - | - | - | - | - | - | - |
| **1,5** | 40 | 30 | - | - | - | - | - | - |
| **2** | 57 | 52 | 45 | 33 | - | - | - | - |
| **3** | 80 | 80 | 78 | 74 | 69 | 53 | - | - |
| **4** | 100 | 100 | 100 | 100 | 98 | 92 | 80 | - |
| **5** | 120 | 120 | 120 | 120 | 120 | 119 | 113 | 90 |
| **6** | 140 | 140 | 140 | 140 | 140 | 140 | 139 | 127 |
| **7** | 160 | 160 | 160 | 160 | 160 | 160 | 160 | 155 |
| **8** | 180 | 180 | 180 | 180 | 180 | 180 | 180 | 179 |
| **9** | 200 | 200 | 200 | 200 | 200 | 200 | 200 | 200 |
| **10** | 220 | 220 | 220 | 220 | 220 | 220 | 220 | 220 |

*Datos en azul corresponden a toma externa / Values in blue correspond to external impulse

d=0,83 $Kg/m^3$ AC 10

| Ø8 | Pressures (Bar) vs Flow ($Nm^3/h$) | | | | | | | |
|---|---|---|---|---|---|---|---|---|
| **Pin / Pout** | **1** | **1,25** | **1,5** | **1,75** | **2** | **2,5** | **3** | **4** |
| **0,2** | - | - | - | - | - | - | - | - |
| **0,3** | - | - | - | - | - | - | - | - |
| **0,4** | - | - | - | - | - | - | - | - |
| **0,5** | - | - | - | - | - | - | - | - |
| **0,75** | - | - | - | - | - | - | - | - |
| **1** | - | - | - | - | - | - | - | - |
| **1,5** | 68 | 51 | - | - | - | - | - | - |
| **2** | 96 | 89 | 76 | 57 | - | - | - | - |
| **3** | 136 | 135 | 132 | 126 | 118 | 90 | - | - |
| **4** | 170 | 170 | 170 | 170 | 167 | 156 | 136 | - |
| **5** | 204 | 204 | 204 | 204 | 204 | 202 | 193 | 152 |
| **6** | 238 | 238 | 238 | 238 | 238 | 238 | 236 | 215 |
| **7** | 272 | 272 | 272 | 272 | 272 | 272 | 272 | 264 |
| **8** | 306 | 306 | 306 | 306 | 306 | 306 | 306 | 305 |
| **9** | 340 | 340 | 340 | 340 | 340 | 340 | 340 | 340 |
| **10** | 374 | 374 | 374 | 374 | 374 | 374 | 374 | 374 |

*Datos en azul corresponden a toma externa / Values in blue correspond to external impulse

d=0,83 $Kg/m^3$ AC 10

DUNGS®
Combustion Controls

**Tablas de caudal / Flow tables (SI units)**

| Ø10 | Pressures (Bar) vs Flow ($Nm^3/h$) | | | | | | | |
|---|---|---|---|---|---|---|---|---|
| **Pin / Pout** | **1** | **1,25** | **1,5** | **1,75** | **2** | **2,5** | **3** | **4** |
| **0,2** | - | - | - | - | - | - | - | - |
| **0,3** | - | - | - | - | - | - | - | - |
| **0,4** | - | - | - | - | - | - | - | - |
| **0,5** | - | - | - | - | - | - | - | - |
| **0,75** | - | - | - | - | - | - | - | - |
| **1** | - | - | - | - | - | - | - | - |
| **1,5** | 105 | 79 | - | - | - | - | - | - |
| **2** | 149 | 137 | 118 | 87 | - | - | - | - |
| **3** | 211 | 209 | 204 | 195 | 182 | 139 | - | - |
| **4** | 263 | 263 | 263 | 262 | 258 | 241 | 210 | - |
| **5** | 316 | 316 | 316 | 316 | 316 | 311 | 297 | 235 |
| **6** | 368 | 368 | 368 | 368 | 368 | 368 | 364 | 332 |
| **7** | 421 | 421 | 421 | 421 | 421 | 421 | 421 | 407 |
| **8** | 473 | 473 | 473 | 473 | 473 | 473 | 473 | 470 |
| **9** | 526 | 526 | 526 | 526 | 526 | 526 | 526 | 526 |
| **10** | 578 | 578 | 578 | 578 | 578 | 578 | 578 | 578 |

*Datos en azul corresponden a toma externa / Values in blue correspond to external impulse

d=0,83 $Kg/m^3$ AC 10

| Ø12 | Pressures (Bar) vs Flow ($Nm^3/h$) | | | | | | | |
|---|---|---|---|---|---|---|---|---|
| **Pin / Pout** | **1** | **1,25** | **1,5** | **1,75** | **2** | **2,5** | **3** | **4** |
| **0,2** | - | - | - | - | - | - | - | - |
| **0,3** | - | - | - | - | - | - | - | - |
| **0,4** | - | - | - | - | - | - | - | - |
| **0,5** | - | - | - | - | - | - | - | - |
| **0,75** | - | - | - | - | - | - | - | - |
| **1** | - | - | - | - | - | - | - | - |
| **1,5** | 121 | 97 | - | - | - | - | - | - |
| **2** | 172 | 168 | 151 | 115 | - | - | - | - |
| **3** | 243 | 256 | 261 | 256 | 240 | 183 | - | - |
| **4** | 303 | 322 | 337 | 344 | 339 | 317 | 276 | - |
| **5** | 363 | 387 | 404 | 415 | 415 | 409 | 391 | 309 |
| **6** | 424 | 451 | 471 | 484 | 484 | 484 | 479 | 437 |
| **7** | 484 | 515 | 538 | 553 | 553 | 553 | 553 | 535 |
| **8** | 545 | 580 | 605 | 622 | 622 | 622 | 622 | 618 |
| **9** | 605 | 644 | 673 | 691 | 691 | 691 | 691 | 691 |
| **10** | 666 | 708 | 740 | 760 | 760 | 760 | 760 | 760 |

*Datos en azul corresponden a toma externa / Values in blue correspond to external impulse

d=0,83 $Kg/m^3$ AC 10

DUNGS®
Combustion Controls

**Tablas de caudal / Flow tables (Imperial units)**

| Ø6 | Pressures (Psig/"WC) vs Flow (SCFH) | | | | | | | |
|---|---|---|---|---|---|---|---|---|
| **Pin / Pout** | **15 Psig** | **18 Psig** | **22 Psig** | **25 Psig** | **29 Psig** | **36 Psig** | **44 Psig** | **58 Psig** |
| **3 Psig** | - | - | - | - | - | - | - | - |
| **4 Psig** | - | - | - | - | - | - | - | - |
| **6 Psig** | - | - | - | - | - | - | - | - |
| **7 Psig** | - | - | - | - | - | - | - | - |
| **11 Psig** | - | - | - | - | - | - | - | - |
| **15 Psig** | - | - | - | - | - | - | - | - |
| **22 Psig** | 1417 | 1062 | - | - | - | - | - | - |
| **29 Psig** | 2004 | 1840 | 1583 | 1174 | - | - | - | - |
| **44 Psig** | 2834 | 2811 | 2742 | 2625 | 2452 | 1872 | - | - |
| **58 Psig** | 3540 | 3540 | 3540 | 3522 | 3467 | 3242 | 2829 | - |
| **73 Psig** | 4246 | 4246 | 4246 | 4246 | 4246 | 4186 | 4001 | 3162 |
| **87 Psig** | 4953 | 4953 | 4953 | 4953 | 4953 | 4953 | 4901 | 4472 |
| **102 Psig** | 5659 | 5659 | 5659 | 5659 | 5659 | 5659 | 5659 | 5477 |
| **116 Psig** | 6365 | 6365 | 6365 | 6365 | 6365 | 6365 | 6365 | 6325 |
| **131 Psig** | 7071 | 7071 | 7071 | 7071 | 7071 | 7071 | 7071 | 7071 |
| **145 Psig** | 7778 | 7778 | 7778 | 7778 | 7778 | 7778 | 7778 | 7778 |

*Datos en azul corresponden a toma externa / Values in blue correspond to external impulse

d=0,05 lb/ft$^3$ AC 10

| Ø8 | Pressures (Psig/"WC) vs Flow (SCFH) | | | | | | | |
|---|---|---|---|---|---|---|---|---|
| **Pin / Pout** | **15 Psig** | **18 Psig** | **22 Psig** | **25 Psig** | **29 Psig** | **36 Psig** | **44 Psig** | **58 Psig** |
| **3 Psig** | - | - | - | - | - | - | - | - |
| **4 Psig** | - | - | - | - | - | - | - | - |
| **6 Psig** | - | - | - | - | - | - | - | - |
| **7 Psig** | - | - | - | - | - | - | - | - |
| **11 Psig** | - | - | - | - | - | - | - | - |
| **15 Psig** | - | - | - | - | - | - | - | - |
| **22 Psig** | 2409 | 1806 | - | - | - | - | - | - |
| **29 Psig** | 3407 | 3128 | 2692 | 1996 | - | - | - | - |
| **44 Psig** | 4818 | 4778 | 4662 | 4462 | 4168 | 3182 | - | - |
| **58 Psig** | 6018 | 6018 | 6018 | 5987 | 5894 | 5512 | 4810 | - |
| **73 Psig** | 7219 | 7219 | 7219 | 7219 | 7219 | 7116 | 6802 | 5376 |
| **87 Psig** | 8420 | 8420 | 8420 | 8420 | 8420 | 8420 | 8331 | 7603 |
| **102 Psig** | 9620 | 9620 | 9620 | 9620 | 9620 | 9620 | 9620 | 9312 |
| **116 Psig** | 10821 | 10821 | 10821 | 10821 | 10821 | 10821 | 10821 | 10752 |
| **131 Psig** | 12021 | 12021 | 12021 | 12021 | 12021 | 12021 | 12021 | 12021 |
| **145 Psig** | 13222 | 13222 | 13222 | 13222 | 13222 | 13222 | 13222 | 13222 |

*Datos en azul corresponden a toma externa / Values in blue correspond to external impulse

d=0,05 lb/ft$^3$ AC 10

DUNGS®
Combustion Controls

**Tablas de caudal / Flow tables (Imperial units)**

| Ø10 | Pressures (Psig/"WC) vs Flow (SCFH) | | | | | | | |
|---|---|---|---|---|---|---|---|---|
| **Pin / Pout** | **15 Psig** | **18 Psig** | **22 Psig** | **25 Psig** | **29 Psig** | **36 Psig** | **44 Psig** | **58 Psig** |
| **3 Psig** | - | - | - | - | - | - | - | - |
| **4 Psig** | - | - | - | - | - | - | - | - |
| **6 Psig** | - | - | - | - | - | - | - | - |
| **7 Psig** | - | - | - | - | - | - | - | - |
| **11 Psig** | - | - | - | - | - | - | - | - |
| **15 Psig** | - | - | - | - | - | - | - | - |
| **22 Psig** | 3720 | 2789 | - | - | - | - | - | - |
| **29 Psig** | 5260 | 4830 | 4156 | 3081 | - | - | - | - |
| **44 Psig** | 7439 | 7378 | 7198 | 6890 | 6436 | 4914 | - | - |
| **58 Psig** | 9293 | 9293 | 9293 | 9244 | 9101 | 8511 | 7427 | - |
| **73 Psig** | 11147 | 11147 | 11147 | 11147 | 11147 | 10988 | 10504 | 8301 |
| **87 Psig** | 13001 | 13001 | 13001 | 13001 | 13001 | 13001 | 12864 | 11740 |
| **102 Psig** | 14855 | 14855 | 14855 | 14855 | 14855 | 14855 | 14855 | 14378 |
| **116 Psig** | 16708 | 16708 | 16708 | 16708 | 16708 | 16708 | 16708 | 16603 |
| **131 Psig** | 18562 | 18562 | 18562 | 18562 | 18562 | 18562 | 18562 | 18562 |
| **145 Psig** | 20416 | 20416 | 20416 | 20416 | 20416 | 20416 | 20416 | 20416 |

*Datos en azul corresponden a toma externa / Values in blue correspond to external impulse

d=0,05 lb/ft$^3$ AC 10

| Ø12 | Pressures (Psig/"WC) vs Flow (SCFH) | | | | | | | |
|---|---|---|---|---|---|---|---|---|
| **Pin / Pout** | **15 Psig** | **18 Psig** | **22 Psig** | **25 Psig** | **29 Psig** | **36 Psig** | **44 Psig** | **58 Psig** |
| **3 Psig** | - | - | - | - | - | - | - | - |
| **4 Psig** | - | - | - | - | - | - | - | - |
| **6 Psig** | - | - | - | - | - | - | - | - |
| **7 Psig** | - | - | - | - | - | - | - | - |
| **11 Psig** | - | - | - | - | - | - | - | - |
| **15 Psig** | - | - | - | - | - | - | - | - |
| **22 Psig** | 4283 | 3416 | - | - | - | - | - | - |
| **29 Psig** | 6057 | 5917 | 5317 | 4050 | - | - | - | - |
| **44 Psig** | 8566 | 9038 | 9209 | 9056 | 8458 | 6458 | - | - |
| **58 Psig** | 10700 | 11383 | 11889 | 12150 | 11962 | 11186 | 9762 | - |
| **73 Psig** | 12835 | 13654 | 14261 | 14650 | 14650 | 14441 | 13805 | 10910 |
| **87 Psig** | 14970 | 15925 | 16633 | 17087 | 17087 | 17087 | 16908 | 15429 |
| **102 Psig** | 17104 | 18196 | 19004 | 19523 | 19523 | 19523 | 19523 | 18897 |
| **116 Psig** | 19239 | 20467 | 21376 | 21960 | 21960 | 21960 | 21960 | 21820 |
| **131 Psig** | 21373 | 22737 | 23748 | 24396 | 24396 | 24396 | 24396 | 24396 |
| **145 Psig** | 23508 | 25008 | 26120 | 26833 | 26833 | 26833 | 26833 | 26833 |

*Datos en azul corresponden a toma externa / Values in blue correspond to external impulse

d=0,05 lb/ft$^3$ AC 10

Plano CAD, no cambiar manualmente!
CAD-Drawing, do not change manually!

This design and/or document is proprietary and protected by copyright.
It may not, without our prior express consent, be copied nor transmitted
to any third party. It must be returned to us upon discharge of the order.

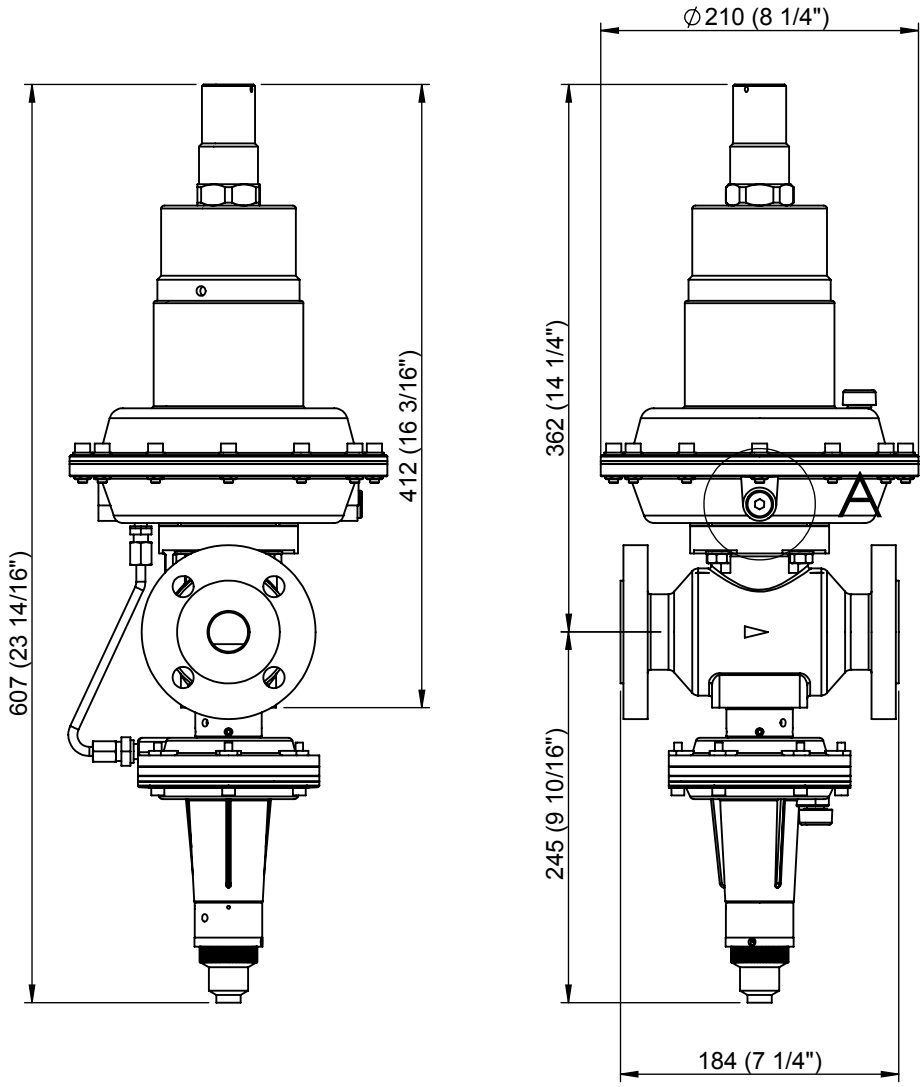


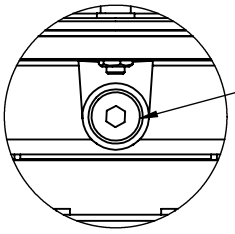

External impulse connection on request

DETALLE A
ESCALA 2 : 5

3D

| Rev | Descripción Modificación | Fecha | Nom |
|---|---|---|---|
| | | | |

**Karl Dungs S.L.U.**
**Combustion Controls**
Avinguda de Can Roqueta, 15 - Pol. Can Roqueta
E-08202 - Sabadell
Barcelona - ESPAÑA

| | Fecha | Nombre | Firmado |
|---|---|---|---|
| Dibujado | 31/10/2018 | J. Inglés | |
| Verificado | 31/10/2018 | A. Rof | |
| Aprobado | 31/10/2018 | GX | |

Tolerancias según ISO 2768
TOLERANCIAS GENERALES ISO 2768-mK
(MEDIUM) TOLERANCIAS LINEALES
Roscas a 6g/6H y longitudes +1.0/-0

Rz 12.5 ( )

Eliminar rebabas y cantos vivos

Escala: 1:5

Material:

Acabado:

Tratamiento:

Peso: 15312.86 gr.

Descripción:
DIMENSIONS FRM-NOC100025UHD

| Código Pieza | Rev. | Formato | Pág. |
|---|---|---|---|
| FRM-NOC100025UHD | 0 | A4 | 1 de 1 |

Dimensiones en mm (inch)

Queda prohibida la preproducción total o parcial de este documento
y del contenido del mismo sin la autorización escrita de Karl Dungs S.L.U.
Todos los derechos reservados.

## ESPECIFICACIONES TÉCNICAS / TECHNICAL SPECIFICATION

DUNGS®
Combustion Controls

Regulador de presión con válvula de seguridad, conforme a las normas EN-334 y EN-14382 /
Pressure regulator with safety shut-off valve, in accordance with the standards EN-334 and EN-14382

| | |
|---|---|
| Presión de operación / Operating pressure | Max. 10 Bar / 1000 kPa / 145 Psig |
| Rango de presión de salida FRM / Outlet pressure range FRM | Ver tabla de Selección / See Set point Table |
| Temperatura máxima ambiental / Ambient maximum temperature | 60 ºC / 145ºF |
| Temperatura minima ambiental / Ambient minimum temperature | -20 ºC / -10 ºF |
| Fluido / Flow | Gas Natural, GLP / Natural Gas, LPG |
| Posición de montaje / Mounting Position | 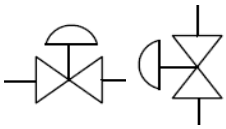 *Puede variar el tarado para presiones inferiores a 300 mbar / for pressures below 300 mbar setpoint can be altered |
| Tipo de Construcción / Construction Type: | DS (De resistencia diferencial) / DS (Diferential strenght) |
| Materiales / Materials — Cuerpo / Body | Hierro fundido / Cast iron EN GJS 500-7 or EN GJS 400-15 |
| Actuador / Actuator | Aluminio / Aluminium |
| Membranas / Membranes | NBR EN549 conform |
| Diametro Nominal / Nominal Diameter | Bridas de conexión PN 25 según EN1092-1 / Connecting flange PN 25 according to EN1092-1 DN 40 |

| Codigo de producto / Product's code | BSP / SAV | BSP | NPT / SAV | NPT |
|---|---|---|---|---|
| | 279077 | 279089 | 280252 | 280264 |

Producto diseñado acorde a las normas EN-334 y EN-14382 / Product designed in accordance to EN-334 and EN-14382
Categoría III (Regulador) y IV (Válvula de seguridad) acorde a PED 2014/68/UE & CRN B51.14 pendiente
Product category III (Regulator) and IV (Safety valve) according to PED 2014/68/UE & CRN B51.14 pending

| Muelle de regulación / Regulation spring | | | | | | | | | | | |
|---|---|---|---|---|---|---|---|---|---|---|---|
| Ø hilo / wire | Rango / Range (min-Max) | | | | | | | | | Color/Color | codigo/code |
| 3,5 | 20 | 25 | (mbar) | 2 | 2,5 | (kPa) | 10 | 10 | ("WC) | amarillo/yellow | 286379 |
| 4 | 25 | 45 | (mbar) | 2,5 | 4,5 | (kPa) | 10 | 20 | ("WC) | azul/blue | 286380 |
| 4,5 | 30 | 65 | (mbar) | 3 | 6,5 | (kPa) | 10 | 30 | ("WC) | negro/black | 286381 |
| 5 | 50 | 100 | (mbar) | 5 | 10 | (kPa) | 20 | 40 | ("WC) | blanco/white | 287682 |

| Muelle de mínima presión / Under pressure spring (UPSO) | | | | | | | | | | | |
|---|---|---|---|---|---|---|---|---|---|---|---|
| Ø hilo / wire | Rango / Range (min-Max) | | | | | | | | | Color/Color | codigo/code |
| 1,25 | 10 | 32 | (mbar) | 1 | 3,2 | (kPa) | 0 | 10 | ("WC) | Blanco/white | 270171 |
| 1,5 | 24 | 40 | (mbar) | 2,4 | 4 | (kPa) | 10 | 20 | ("WC) | Amarillo/yellow | 270175 |
| 2 | 30 | 115 | (mbar) | 3 | 11,5 | (kPa) | 10 | 50 | ("WC) | azul/blue | 270176 |

| Muelle de máxima presión / Over pressure spring (OPSO) | | | | | | | | | | | |
|---|---|---|---|---|---|---|---|---|---|---|---|
| Ø hilo / wire | Rango / Range (min-Max) | | | | | | | | | Color/Color | codigo/code |
| 2,25 | 40 | 130 | (mbar) | 4 | 13 | (kPa) | 20 | 1,9 | ("WC) | plata/silver | 270181 |
| 2,5 | 60 | 190 | (mbar) | 6 | 19 | (kPa) | 20 | 2,8 | ("WC) | verde/green | 270182 |
| 2,75 | 90 | 240 | (mbar) | 9 | 24 | (kPa) | 40 | 3,5 | ("WC) | rojo/red | 270183 |

| Orificios / Orifices | | | | | | |
|---|---|---|---|---|---|---|
| Medida/size | Ø10 | Ø12 | Ø16 | Ø20 | Ø25 | |
| $P_{umax}$* (bar/psig) | 10 / 145 | 10 / 145 | 10 / 145 | 8 / 116 | 6 / 087 | |

*Máxima presión de entrada / Maximum inlet pressure

Regulador de gas para media presión / Gas regulator for medium pressure
**FRM-NOC 10040 ND / SAV ND**

DUNGS®
Combustion Controls

**Tablas de caudal / Flow tables (SI units)**

| Ø10 | Pressures (Bar) vs Flow ($Nm^3/h$) | | | | | | | |
|---|---|---|---|---|---|---|---|---|
| **Pin / Pout** | **0,02** | **0,03** | **0,04** | **0,05** | **0,06** | **0,07** | **0,08** | **0,1** |
| **0,2** | 41 | 40 | 39 | 38 | 37 | 36 | 34 | 32 |
| **0,3** | 51 | 50 | 50 | 49 | 48 | 47 | 47 | 45 |
| **0,4** | 60 | 59 | 58 | 58 | 57 | 57 | 56 | 55 |
| **0,5** | 67 | 67 | 66 | 66 | 65 | 65 | 64 | 63 |
| **0,75** | 82 | 82 | 82 | 82 | 82 | 82 | 81 | 81 |
| **1** | 96 | 96 | 96 | 95 | 95 | 95 | 95 | 95 |
| **1,5** | 119 | 119 | 119 | 119 | 119 | 119 | 119 | 119 |
| **2** | 143 | 143 | 143 | 143 | 143 | 143 | 143 | 143 |
| **3** | 191 | 191 | 191 | 191 | 191 | 191 | 191 | 191 |
| **4** | 238 | 238 | 238 | 238 | 238 | 238 | 238 | 238 |
| **5** | 286 | 286 | 286 | 286 | 286 | 286 | 286 | 286 |
| **6** | 333 | 333 | 333 | 333 | 333 | 333 | 333 | 333 |
| **7** | 381 | 381 | 381 | 381 | 381 | 381 | 381 | 381 |
| **8** | 428 | 428 | 428 | 428 | 428 | 428 | 428 | 428 |
| **9** | 476 | 476 | 476 | 476 | 476 | 476 | 476 | 476 |
| **10** | 523 | 523 | 523 | 523 | 523 | 523 | 523 | 523 |

*Datos en azul corresponden a toma externa / Values in blue correspond to external impulse

d=0,83 $Kg/m^3$ AC 10

| Ø16 | Pressures (Bar) vs Flow ($Nm^3/h$) | | | | | | | |
|---|---|---|---|---|---|---|---|---|
| **Pin / Pout** | **0,02** | **0,03** | **0,04** | **0,05** | **0,06** | **0,07** | **0,08** | **0,1** |
| **0,2** | 105 | 103 | 100 | 97 | 94 | 91 | 88 | 81 |
| **0,3** | 130 | 128 | 127 | 125 | 123 | 121 | 119 | 114 |
| **0,4** | 150 | 149 | 148 | 147 | 145 | 144 | 142 | 139 |
| **0,5** | 168 | 167 | 166 | 165 | 164 | 163 | 162 | 159 |
| **0,75** | 203 | 203 | 203 | 202 | 202 | 201 | 200 | 199 |
| **1** | 231 | 231 | 231 | 231 | 231 | 231 | 231 | 230 |
| **1,5** | 278 | 278 | 278 | 278 | 278 | 278 | 278 | 278 |
| **2** | 321 | 321 | 321 | 321 | 321 | 321 | 321 | 321 |
| **3** | 482 | 482 | 482 | 482 | 482 | 482 | 482 | 482 |
| **4** | 602 | 602 | 602 | 602 | 602 | 602 | 602 | 602 |
| **5** | 722 | 722 | 722 | 722 | 722 | 722 | 722 | 722 |
| **6** | 842 | 842 | 842 | 842 | 842 | 842 | 842 | 842 |
| **7** | 962 | 962 | 962 | 962 | 962 | 962 | 962 | 962 |
| **8** | 1082 | 1082 | 1082 | 1082 | 1082 | 1082 | 1082 | 1082 |
| **9** | 1202 | 1202 | 1202 | 1202 | 1202 | 1202 | 1202 | 1202 |
| **10** | 0 | 0 | 1322 | 1322 | 1322 | 1322 | 1322 | 1322 |

*Datos en azul corresponden a toma externa / Values in blue correspond to external impulse

d=0,83 $Kg/m^3$ AC 10

DUNGS®
Combustion Controls

**Tablas de caudal / Flow tables (SI units)**

| Ø20 | Pressures (Bar) vs Flow ($Nm^3/h$) | | | | | | | |
|---|---|---|---|---|---|---|---|---|
| **Pin / Pout** | **0,02** | **0,03** | **0,04** | **0,05** | **0,06** | **0,07** | **0,08** | **0,1** |
| **0,2** | 144 | 141 | 137 | 134 | 130 | 126 | 121 | 112 |
| **0,3** | 179 | 176 | 174 | 171 | 169 | 166 | 163 | 157 |
| **0,4** | 207 | 205 | 203 | 201 | 199 | 197 | 195 | 190 |
| **0,5** | 230 | 229 | 228 | 226 | 225 | 223 | 222 | 218 |
| **0,75** | 278 | 278 | 277 | 276 | 276 | 275 | 274 | 273 |
| **1** | 316 | 316 | 316 | 316 | 315 | 315 | 315 | 314 |
| **1,5** | 378 | 378 | 378 | 378 | 378 | 378 | 378 | 378 |
| **2** | 434 | 434 | 434 | 434 | 434 | 434 | 434 | 434 |
| **3** | 682 | 682 | 682 | 682 | 682 | 682 | 682 | 682 |
| **4** | 852 | 852 | 852 | 852 | 852 | 852 | 852 | 852 |
| **5** | 1022 | 1022 | 1022 | 1022 | 1022 | 1022 | 1022 | 1022 |
| **6** | 1192 | 1192 | 1192 | 1192 | 1192 | 1192 | 1192 | 1192 |
| **7** | 0 | 0 | 1362 | 1362 | 1362 | 1362 | 1362 | 1362 |
| **8** | 0 | 0 | 0 | 1532 | 1532 | 1532 | 1532 | 1532 |
| **9** | 0 | 0 | 0 | 0 | 1702 | 1702 | 1702 | 1702 |
| **10** | 0 | 0 | 0 | 0 | 0 | 1872 | 1872 | 1872 |

*Datos en azul corresponden a toma externa / Values in blue correspond to external impulse

d=0,83 $Kg/m^3$ AC 10

| Ø25 | Pressures (Bar) vs Flow ($Nm^3/h$) | | | | | | | |
|---|---|---|---|---|---|---|---|---|
| **Pin / Pout** | **0,02** | **0,03** | **0,04** | **0,05** | **0,06** | **0,07** | **0,08** | **0,1** |
| **0,2** | 155 | 158 | 154 | 149 | 145 | 140 | 136 | 125 |
| **0,3** | 192 | 197 | 194 | 191 | 188 | 185 | 182 | 175 |
| **0,4** | 222 | 229 | 227 | 225 | 223 | 220 | 218 | 213 |
| **0,5** | 248 | 256 | 254 | 253 | 251 | 249 | 248 | 244 |
| **0,75** | 299 | 310 | 310 | 309 | 308 | 307 | 307 | 305 |
| **1** | 340 | 353 | 353 | 353 | 353 | 352 | 352 | 351 |
| **1,5** | 407 | 423 | 423 | 423 | 423 | 423 | 423 | 423 |
| **2** | 696 | 723 | 723 | 723 | 723 | 723 | 723 | 723 |
| **3** | 927 | 963 | 963 | 963 | 963 | 963 | 963 | 963 |
| **4** | 1158 | 1203 | 1203 | 1203 | 1203 | 1203 | 1203 | 1203 |
| **5** | 1389 | 1443 | 1443 | 1443 | 1443 | 1443 | 1443 | 1443 |
| **6** | 0 | 0 | 1683 | 1683 | 1683 | 1683 | 1683 | 1683 |
| **7** | 0 | 0 | 0 | 1923 | 1923 | 1923 | 1923 | 1923 |
| **8** | 0 | 0 | 0 | 0 | 2163 | 2163 | 2163 | 2163 |
| **9** | 0 | 0 | 0 | 0 | 0 | 2403 | 2403 | 2403 |
| **10** | 0 | 0 | 0 | 0 | 0 | 0 | 0 | 0 |

*Datos en azul corresponden a toma externa / Values in blue correspond to external impulse

d=0,83 $Kg/m^3$ AC 10

DUNGS®
Combustion Controls

**Tablas de caudal / Flow tables (Imperial units)**

| Ø10 | Pressures (Psig/"WC) vs Flow (SCFH) | | | | | | | |
|---|---|---|---|---|---|---|---|---|
| **Pin / Pout** | **8 "WC** | **12 "WC** | **16 "WC** | **20 "WC** | **24 "WC** | **28 "WC** | **32 "WC** | **40 "WC** |
| **3 Psig** | 1446 | 1413 | 1377 | 1339 | 1300 | 1259 | 1215 | 1119 |
| **4 Psig** | 1804 | 1780 | 1755 | 1729 | 1702 | 1674 | 1645 | 1583 |
| **6 Psig** | 2102 | 2084 | 2065 | 2046 | 2026 | 2005 | 1984 | 1938 |
| **7 Psig** | 2362 | 2349 | 2335 | 2320 | 2305 | 2289 | 2273 | 2238 |
| **11 Psig** | 2913 | 2907 | 2901 | 2894 | 2886 | 2879 | 2871 | 2853 |
| **15 Psig** | 3375 | 3374 | 3373 | 3371 | 3369 | 3367 | 3364 | 3357 |
| **22 Psig** | 4215 | 4215 | 4215 | 4215 | 4215 | 4215 | 4215 | 4215 |
| **29 Psig** | 5054 | 5054 | 5054 | 5054 | 5054 | 5054 | 5054 | 5054 |
| **44 Psig** | 6731 | 6731 | 6731 | 6731 | 6731 | 6731 | 6731 | 6731 |
| **58 Psig** | 8408 | 8408 | 8408 | 8408 | 8408 | 8408 | 8408 | 8408 |
| **73 Psig** | 10085 | 10085 | 10085 | 10085 | 10085 | 10085 | 10085 | 10085 |
| **87 Psig** | 11763 | 11763 | 11763 | 11763 | 11763 | 11763 | 11763 | 11763 |
| **102 Psig** | 13440 | 13440 | 13440 | 13440 | 13440 | 13440 | 13440 | 13440 |
| **116 Psig** | 15117 | 15117 | 15117 | 15117 | 15117 | 15117 | 15117 | 15117 |
| **131 Psig** | 16794 | 16794 | 16794 | 16794 | 16794 | 16794 | 16794 | 16794 |
| **145 Psig** | 18472 | 18472 | 18472 | 18472 | 18472 | 18472 | 18472 | 18472 |

*Datos en azul corresponden a toma externa / Values in blue correspond to external impulse

d=0,05 lb/ft$^3$ AC 10

| Ø16 | Pressures (Psig/"WC) vs Flow (SCFH) | | | | | | | |
|---|---|---|---|---|---|---|---|---|
| **Pin / Pout** | **8 "WC** | **12 "WC** | **16 "WC** | **20 "WC** | **24 "WC** | **28 "WC** | **32 "WC** | **40 "WC** |
| **3 Psig** | 3709 | 3622 | 3531 | 3435 | 3334 | 3228 | 3115 | 2870 |
| **4 Psig** | 4594 | 4533 | 4469 | 4403 | 4335 | 4263 | 4189 | 4030 |
| **6 Psig** | 5314 | 5269 | 5222 | 5173 | 5123 | 5071 | 5016 | 4901 |
| **7 Psig** | 5930 | 5896 | 5861 | 5825 | 5787 | 5747 | 5706 | 5619 |
| **11 Psig** | 7183 | 7168 | 7152 | 7135 | 7117 | 7098 | 7078 | 7035 |
| **15 Psig** | 8171 | 8169 | 8166 | 8161 | 8156 | 8151 | 8144 | 8128 |
| **22 Psig** | 9827 | 9827 | 9827 | 9827 | 9827 | 9827 | 9827 | 9827 |
| **29 Psig** | 11331 | 11331 | 11331 | 11331 | 11331 | 11331 | 11331 | 11331 |
| **44 Psig** | 17004 | 17004 | 17004 | 17004 | 17004 | 17004 | 17004 | 17004 |
| **58 Psig** | 21242 | 21242 | 21242 | 21242 | 21242 | 21242 | 21242 | 21242 |
| **73 Psig** | 25479 | 25479 | 25479 | 25479 | 25479 | 25479 | 25479 | 25479 |
| **87 Psig** | 29716 | 29716 | 29716 | 29716 | 29716 | 29716 | 29716 | 29716 |
| **102 Psig** | 33953 | 33953 | 33953 | 33953 | 33953 | 33953 | 33953 | 33953 |
| **116 Psig** | 38191 | 38191 | 38191 | 38191 | 38191 | 38191 | 38191 | 38191 |
| **131 Psig** | 42428 | 42428 | 42428 | 42428 | 42428 | 42428 | 42428 | 42428 |
| **145 Psig** | 0 | 0 | 46665 | 46665 | 46665 | 46665 | 46665 | 46665 |

*Datos en azul corresponden a toma externa / Values in blue correspond to external impulse

d=0,05 lb/ft$^3$ AC 10

DUNGS®
Combustion Controls

**Tablas de caudal / Flow tables (Imperial units)**

| Ø20 | Pressures (Psig/"WC) vs Flow (SCFH) | | | | | | | |
|---|---|---|---|---|---|---|---|---|
| **Pin / Pout** | **8 "WC** | **12 "WC** | **16 "WC** | **20 "WC** | **24 "WC** | **28 "WC** | **32 "WC** | **40 "WC** |
| **3 Psig** | 5098 | 4978 | 4853 | 4721 | 4582 | 4436 | 4281 | 3944 |
| **4 Psig** | 6309 | 6225 | 6138 | 6047 | 5953 | 5854 | 5752 | 5534 |
| **6 Psig** | 7292 | 7230 | 7166 | 7099 | 7030 | 6958 | 6883 | 6725 |
| **7 Psig** | 8131 | 8084 | 8036 | 7986 | 7934 | 7880 | 7823 | 7704 |
| **11 Psig** | 9828 | 9807 | 9785 | 9762 | 9738 | 9712 | 9685 | 9626 |
| **15 Psig** | 11156 | 11152 | 11148 | 11142 | 11135 | 11127 | 11118 | 11097 |
| **22 Psig** | 13355 | 13355 | 13355 | 13355 | 13355 | 13355 | 13355 | 13355 |
| **29 Psig** | 15320 | 15320 | 15320 | 15320 | 15320 | 15320 | 15320 | 15320 |
| **44 Psig** | 24089 | 24089 | 24089 | 24089 | 24089 | 24089 | 24089 | 24089 |
| **58 Psig** | 30092 | 30092 | 30092 | 30092 | 30092 | 30092 | 30092 | 30092 |
| **73 Psig** | 36095 | 36095 | 36095 | 36095 | 36095 | 36095 | 36095 | 36095 |
| **87 Psig** | 42098 | 42098 | 42098 | 42098 | 42098 | 42098 | 42098 | 42098 |
| **102 Psig** | 0 | 0 | 48101 | 48101 | 48101 | 48101 | 48101 | 48101 |
| **116 Psig** | 0 | 0 | 0 | 54103 | 54103 | 54103 | 54103 | 54103 |
| **131 Psig** | 0 | 0 | 0 | 0 | 60106 | 60106 | 60106 | 60106 |
| **145 Psig** | 0 | 0 | 0 | 0 | 0 | 66109 | 66109 | 66109 |

*Datos en azul corresponden a toma externa / Values in blue correspond to external impulse

d=0,05 lb/ft$^3$ AC 10

| Ø25 | Pressures (Psig/"WC) vs Flow (SCFH) | | | | | | | |
|---|---|---|---|---|---|---|---|---|
| **Pin / Pout** | **8 "WC** | **12 "WC** | **16 "WC** | **20 "WC** | **24 "WC** | **28 "WC** | **32 "WC** | **40 "WC** |
| **3 Psig** | 5483 | 5564 | 5424 | 5276 | 5121 | 4958 | 4785 | 4408 |
| **4 Psig** | 6785 | 6958 | 6860 | 6759 | 6653 | 6543 | 6429 | 6186 |
| **6 Psig** | 7843 | 8081 | 8009 | 7935 | 7857 | 7777 | 7693 | 7517 |
| **7 Psig** | 8745 | 9036 | 8982 | 8926 | 8868 | 8807 | 8744 | 8611 |
| **11 Psig** | 10570 | 10962 | 10938 | 10912 | 10885 | 10856 | 10825 | 10760 |
| **15 Psig** | 12000 | 12466 | 12461 | 12455 | 12447 | 12439 | 12428 | 12405 |
| **22 Psig** | 14366 | 14930 | 14930 | 14930 | 14930 | 14930 | 14930 | 14930 |
| **29 Psig** | 24570 | 25534 | 25534 | 25534 | 25534 | 25534 | 25534 | 25534 |
| **44 Psig** | 32725 | 34008 | 34008 | 34008 | 34008 | 34008 | 34008 | 34008 |
| **58 Psig** | 40879 | 42483 | 42483 | 42483 | 42483 | 42483 | 42483 | 42483 |
| **73 Psig** | 49034 | 50958 | 50958 | 50958 | 50958 | 50958 | 50958 | 50958 |
| **87 Psig** | 0 | 0 | 59432 | 59432 | 59432 | 59432 | 59432 | 59432 |
| **102 Psig** | 0 | 0 | 0 | 67907 | 67907 | 67907 | 67907 | 67907 |
| **116 Psig** | 0 | 0 | 0 | 0 | 76381 | 76381 | 76381 | 76381 |
| **131 Psig** | 0 | 0 | 0 | 0 | 0 | 84856 | 84856 | 84856 |
| **145 Psig** | 0 | 0 | 0 | 0 | 0 | 0 | 0 | 0 |

*Datos en azul corresponden a toma externa / Values in blue correspond to external impulse

d=0,05 lb/ft$^3$ AC 10

Plano CAD, no cambiar manualmente!
CAD-Drawing, do not change manually!

This design and/or document is proprietary and protected by copyright.
It may not, without our prior express consent, be copied nor transmitted
to any third party. It must be returned to us upon discharge of the order.

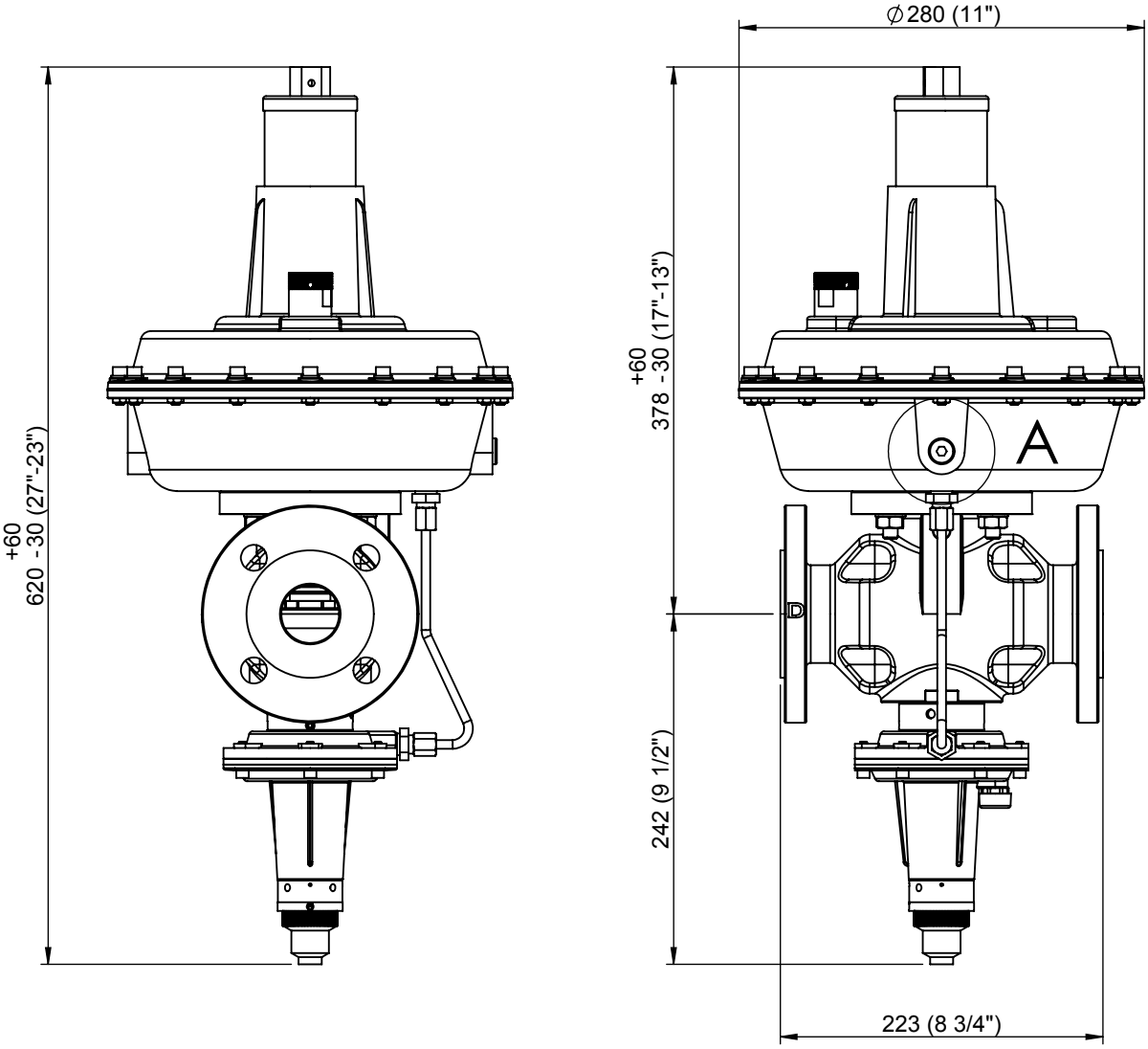


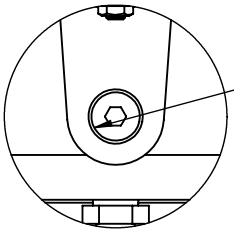

External impulse connection on request

DETALLE A
ESCALA 2 : 5

3D

| Rev | Descripción Modificación | Fecha | Nom |
|---|---|---|---|
| | | | |
| | | | |
| | | | |
| | | | |
| | | | |
| | | | |
| | | | |
| | | | |
| | | | |
| | | | |
| | | | |
| | | | |

**Karl Dungs S.L.U.**
**Combustion Controls**
Avinguda de Can Roqueta, 15 - Pol. Can Roqueta
E-08202 - Sabadell
Barcelona - ESPAÑA

| | Fecha | Nombre | Firmado |
|---|---|---|---|
| Dibujado | 31/10/2018 | A.Rof | |
| Verificado | 31/10/2018 | J.Inglés | |
| Aprobado | 31/10/2018 | GX | |

Tolerancias según ISO 2768
TOLERANCIAS GENERALES ISO 2768-mK
(MEDIUM) TOLERANCIAS LINEALES
Roscas a 6g/6H y longitudes +1.0/-0

Rz 12.5 ( )

Eliminar rebabas y cantos vivos

Escala: 1:5

Material:

Acabado:

Tratamiento:

Peso: 19004.77 gr.

Descripción:
DIMENSIONS FRM-NOC100040ND/MD

| Código Pieza | Rev. | Formato | Pág. |
|---|---|---|---|
| FRM-NOC100040ND_MD | 0 | A4 | 1 de 1 |

Dimensiones en mm (inch)

Queda prohibida la preproducción total o parcial de este documento
y del contenido del mismo sin la autorización escrita de Karl Dungs S.L.U.
Todos los derechos reservados.

## ESPECIFICACIONES TÉCNICAS / TECHNICAL SPECIFICATION

DUNGS®
Combustion Controls

Regulador de presión con válvula de seguridad, conforme a las normas EN-334 y EN-14382 /
Pressure regulator with safety shut-off valve, in accordance with the standards EN-334 and EN-14382

| | |
|---|---|
| Presión de operación / Operating pressure | Max. 10 Bar / 1000 kPa / 145 Psig |
| Rango de presión de salida FRM / Outlet pressure range FRM | Ver tabla de Selección / See Set point Table |
| Temperatura máxima ambiental / Ambient maximum temperature | 60 ºC / 145ºF |
| Temperatura minima ambiental / Ambient minimum temperature | -20 ºC / -10 ºF |
| Fluido / Flow | Gas Natural, GLP / Natural Gas, LPG |
| Posición de montaje / Mounting Position | 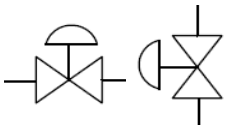 *Puede variar el tarado para presiones inferiores a 300 mbar / for pressures below 300 mbar setpoint can be altered |
| Tipo de Construcción / Construction Type: | DS (De resistencia diferencial) / DS (Diferential strenght) |
| Materiales / Materials — Cuerpo / Body | Hierro fundido / Cast iron EN GJS 500-7 or EN GJS 400-15 |
| Actuador / Actuator | Aluminio / Aluminium |
| Membranas / Membranes | NBR EN549 conform |
| Diametro Nominal / Nominal Diameter | Bridas de conexión PN 25 según EN1092-1 / Connecting flange PN 25 according to EN1092-1 DN 40 |

| Codigo de producto / Product's code | BSP / SAV | BSP | NPT / SAV | NPT |
|---|---|---|---|---|
| | 279078 | 279090 | 280253 | 280265 |

Producto diseñado acorde a las normas EN-334 y EN-14382 / Product designed in accordance to EN-334 and EN-14382
Categoría III (Regulador) y IV (Válvula de seguridad) acorde a PED 2014/68/UE & CRN B51.14 pendiente
Product category III (Regulator) and IV (Safety valve) according to PED 2014/68/UE & CRN B51.14 pending

| Muelle de regulación / Regulation spring | | | | | | | | | | | |
|---|---|---|---|---|---|---|---|---|---|---|---|
| Ø hilo / wire | Rango / Range (min-Max) | | | | | | | | | Color/Color | codigo/code |
| 5,5 | 80 | 150 | (mbar) | 8 | 15 | (kPa) | 30 | 2,2 | ("WC) | rosa/pink | 287288 |
| 6 | 130 | 250 | (mbar) | 13 | 25 | (kPa) | 1,9 | 3,6 | (psig) | verde/green | 287289 |
| 7 | 200 | 350 | (mbar) | 20 | 35 | (kPa) | 2,9 | 5,1 | (psig) | azul/blue | 287290 |
| 8 | 300 | 400 | (mbar) | 30 | 40 | (kPa) | 4,4 | 5,8 | (psig) | negro/black | 287291 |

| Muelle de mínima presión / Under pressure spring (UPSO) | | | | | | | | | | | |
|---|---|---|---|---|---|---|---|---|---|---|---|
| Ø hilo / wire | Rango / Range (min-Max) | | | | | | | | | Color/Color | codigo/code |
| 2 | 35 | 110 | (mbar) | 3,5 | 11 | (kPa) | 10 | 40 | ("WC) | azul/blue | 270176 |
| 2,3 | 50 | 250 | (mbar) | 5 | 25 | (kPa) | 20 | 3,6 | ("WC) | negro/black | 270177 |
| 2,5 | 80 | 400 | (mbar) | 8 | 40 | (kPa) | 30 | 5,8 | ("WC) | lila/purple | 270178 |

| Muelle de máxima presión / Over pressure spring (OPSO) | | | | | | | | | | | |
|---|---|---|---|---|---|---|---|---|---|---|---|
| Ø hilo / wire | Rango / Range (min-Max) | | | | | | | | | Color/Color | codigo/code |
| 2,5 | 180 | 290 | (mbar) | 18 | 29 | (kPa) | 2,6 | 4,2 | (psig) | verde/green | 270182 |
| 2,75 | 230 | 370 | (mbar) | 23 | 37 | (kPa) | 3,3 | 5,4 | (psig) | rojo/red | 270183 |
| 3,25 | 300 | 500 | (mbar) | 30 | 50 | (kPa) | 4,4 | 7,3 | (psig) | amarillo/yellow | 270184 |
| 3,5 | 400 | 800 | (mbar) | 40 | 80 | (kPa) | 5,8 | 11,6 | (psig) | azul/blue | 270185 |

| Orificios / Orifices | | | | | | |
|---|---|---|---|---|---|---|
| Medida/size | Ø10 | Ø12 | Ø16 | Ø20 | Ø25 | |
| $P_{umax}$* (bar/psig) | 10 / 145 | 10 / 145 | 10 / 145 | 10 / 145 | 9 / 130,5 | |

*Máxima presión de entrada / Maximum inlet pressure

Regulador de gas para media presión / Gas regulator for medium pressure

**FRM-NOC 100040 MD / SAV MD**

DUNGS®
Combustion Controls

**Tablas de caudal / Flow tables (SI units)**

| Ø10 | Pressures (Bar) vs Flow ($Nm^3/h$) | | | | | | | |
|---|---|---|---|---|---|---|---|---|
| **Pin / Pout** | **0,08** | **0,1** | **0,15** | **0,2** | **0,25** | **0,3** | **0,35** | **0,4** |
| **0,2** | 40 | 37 | 27 | - | - | - | - | - |
| **0,3** | 54 | 52 | 46 | 39 | 28 | - | - | - |
| **0,4** | 66 | 64 | 60 | 55 | 48 | 40 | 29 | - |
| **0,5** | 75 | 74 | 71 | 67 | 62 | 57 | 50 | 42 |
| **0,75** | 95 | 94 | 93 | 91 | 88 | 85 | 82 | 78 |
| **1** | 111 | 111 | 110 | 109 | 108 | 106 | 104 | 102 |
| **1,5** | 139 | 139 | 139 | 139 | 139 | 139 | 139 | 138 |
| **2** | 167 | 167 | 167 | 167 | 167 | 167 | 167 | 167 |
| **3** | 223 | 223 | 223 | 223 | 223 | 223 | 223 | 223 |
| **4** | 278 | 278 | 278 | 278 | 278 | 278 | 278 | 278 |
| **5** | 334 | 334 | 334 | 334 | 334 | 334 | 334 | 334 |
| **6** | 389 | 389 | 389 | 389 | 389 | 389 | 389 | 389 |
| **7** | 445 | 445 | 445 | 445 | 445 | 445 | 445 | 445 |
| **8** | 500 | 500 | 500 | 500 | 500 | 500 | 500 | 500 |
| **9** | 556 | 556 | 556 | 556 | 556 | 556 | 556 | 556 |
| **10** | 611 | 611 | 611 | 611 | 611 | 611 | 611 | 611 |

*Datos en azul corresponden a toma externa / Values in blue correspond to external impulse

d=0,83 $Kg/m^3$ AC 10

| Ø16 | Pressures (Bar) vs Flow ($Nm^3/h$) | | | | | | | |
|---|---|---|---|---|---|---|---|---|
| **Pin / Pout** | **0,08** | **0,1** | **0,15** | **0,2** | **0,25** | **0,3** | **0,35** | **0,4** |
| **0,2** | 100 | 92 | 65 | - | - | - | - | - |
| **0,3** | 135 | 130 | 112 | 92 | 65 | - | - | - |
| **0,4** | 161 | 158 | 144 | 129 | 112 | 93 | 67 | - |
| **0,5** | 184 | 181 | 169 | 157 | 144 | 130 | 114 | 95 |
| **0,75** | 228 | 227 | 218 | 209 | 201 | 192 | 184 | 174 |
| **1** | 263 | 262 | 255 | 247 | 241 | 236 | 230 | 224 |
| **1,5** | 318 | 318 | 311 | 305 | 301 | 298 | 296 | 293 |
| **2** | 368 | 368 | 360 | 352 | 348 | 345 | 343 | 342 |
| **3** | 453 | 453 | 444 | 435 | 429 | 426 | 424 | 422 |
| **4** | 652 | 652 | 637 | 625 | 617 | 612 | 609 | 606 |
| **5** | 782 | 782 | 765 | 749 | 740 | 734 | 730 | 727 |
| **6** | 912 | 912 | 892 | 874 | 863 | 856 | 852 | 848 |
| **7** | 1042 | 1042 | 1019 | 998 | 986 | 979 | 973 | 969 |
| **8** | 1172 | 1172 | 1146 | 1123 | 1110 | 1101 | 1095 | 1090 |
| **9** | 1302 | 1302 | 1273 | 1248 | 1233 | 1223 | 1216 | 1211 |
| **10** | 0 | 0 | 1400 | 1372 | 1356 | 1345 | 1337 | 1332 |

*Datos en azul corresponden a toma externa / Values in blue correspond to external impulse

d=0,83 $Kg/m^3$ AC 10

DUNGS®
Combustion Controls

**Tablas de caudal / Flow tables (SI units)**

| Ø20 | Pressures (Bar) vs Flow ($Nm^3/h$) | | | | | | | |
|---|---|---|---|---|---|---|---|---|
| **Pin / Pout** | **0,08** | **0,1** | **0,15** | **0,2** | **0,25** | **0,3** | **0,35** | **0,4** |
| **0,2** | 125 | 112 | 77 | - | - | - | - | - |
| **0,3** | 168 | 156 | 133 | 109 | 77 | - | - | - |
| **0,4** | 201 | 190 | 170 | 152 | 133 | 110 | 79 | - |
| **0,5** | 229 | 218 | 200 | 185 | 170 | 154 | 135 | 112 |
| **0,75** | 283 | 272 | 256 | 245 | 236 | 226 | 216 | 205 |
| **1** | 325 | 314 | 299 | 290 | 283 | 277 | 270 | 263 |
| **1,5** | 390 | 377 | 362 | 355 | 350 | 347 | 344 | 341 |
| **2** | 447 | 433 | 415 | 407 | 402 | 399 | 396 | 395 |
| **3** | 541 | 524 | 502 | 492 | 486 | 483 | 480 | 478 |
| **4** | 793 | 767 | 736 | 721 | 712 | 706 | 702 | 700 |
| **5** | 951 | 920 | 882 | 864 | 854 | 847 | 843 | 839 |
| **6** | 1109 | 1073 | 1029 | 1008 | 996 | 988 | 983 | 979 |
| **7** | 0 | 0 | 1176 | 1152 | 1138 | 1129 | 1123 | 1118 |
| **8** | 0 | 0 | 0 | 1296 | 1280 | 1270 | 1263 | 1258 |
| **9** | 0 | 0 | 0 | 0 | 1422 | 1411 | 1403 | 1397 |
| **10** | 0 | 0 | 0 | 0 | 0 | 1552 | 1543 | 1537 |

*Datos en azul corresponden a toma externa / Values in blue correspond to external impulse

d=0,83 $Kg/m^3$ AC 10

| Ø25 | Pressures (Bar) vs Flow ($Nm^3/h$) | | | | | | | |
|---|---|---|---|---|---|---|---|---|
| **Pin / Pout** | **0,08** | **0,1** | **0,15** | **0,2** | **0,25** | **0,3** | **0,35** | **0,4** |
| **0,2** | 129 | 115 | 80 | - | - | - | - | - |
| **0,3** | 173 | 161 | 137 | 112 | 80 | - | - | - |
| **0,4** | 207 | 196 | 175 | 157 | 137 | 113 | 81 | - |
| **0,5** | 236 | 225 | 206 | 191 | 176 | 159 | 139 | 115 |
| **0,75** | 291 | 280 | 264 | 253 | 243 | 233 | 223 | 211 |
| **1** | 334 | 323 | 307 | 298 | 291 | 285 | 278 | 271 |
| **1,5** | 401 | 388 | 372 | 364 | 360 | 357 | 354 | 351 |
| **2** | 458 | 444 | 425 | 417 | 412 | 409 | 406 | 405 |
| **3** | 723 | 700 | 671 | 657 | 649 | 644 | 641 | 638 |
| **4** | 903 | 874 | 838 | 821 | 811 | 805 | 800 | 797 |
| **5** | 1083 | 1048 | 1005 | 985 | 973 | 965 | 960 | 956 |
| **6** | 0 | 0 | 1172 | 1149 | 1135 | 1126 | 1119 | 1115 |
| **7** | 0 | 0 | 0 | 1312 | 1297 | 1286 | 1279 | 1274 |
| **8** | 0 | 0 | 0 | 0 | 1458 | 1447 | 1439 | 1433 |
| **9** | 0 | 0 | 0 | 0 | 0 | 1607 | 1598 | 1592 |
| **10** | 0 | 0 | 0 | 0 | 0 | 0 | 0 | 0 |

*Datos en azul corresponden a toma externa / Values in blue correspond to external impulse

d=0,83 $Kg/m^3$ AC 10

DUNGS®
Combustion Controls

**Tablas de caudal / Flow tables (Imperial units)**

| Ø10 | Pressures (Psig/"WC) vs Flow (SCFH) | | | | | | | |
|---|---|---|---|---|---|---|---|---|
| **Pin / Pout** | **32 "WC** | **40 "WC** | **60 "WC** | **80 "WC** | **100 "WC** | **121 "WC** | **141 "WC** | **161 "WC** |
| **3 Psig** | 1419 | 1308 | 945 | - | - | - | - | - |
| **4 Psig** | 1922 | 1849 | 1637 | 1365 | 985 | - | - | - |
| **6 Psig** | 2318 | 2265 | 2113 | 1931 | 1706 | 1420 | 1023 | - |
| **7 Psig** | 2656 | 2615 | 2501 | 2364 | 2202 | 2009 | 1772 | 1473 |
| **11 Psig** | 3354 | 3334 | 3274 | 3201 | 3115 | 3013 | 2894 | 2756 |
| **15 Psig** | 3930 | 3923 | 3897 | 3861 | 3815 | 3758 | 3689 | 3609 |
| **22 Psig** | 4925 | 4925 | 4925 | 4925 | 4925 | 4920 | 4907 | 4886 |
| **29 Psig** | 5905 | 5905 | 5905 | 5905 | 5905 | 5905 | 5905 | 5905 |
| **44 Psig** | 7864 | 7864 | 7864 | 7864 | 7864 | 7864 | 7864 | 7864 |
| **58 Psig** | 9824 | 9824 | 9824 | 9824 | 9824 | 9824 | 9824 | 9824 |
| **73 Psig** | 11784 | 11784 | 11784 | 11784 | 11784 | 11784 | 11784 | 11784 |
| **87 Psig** | 13744 | 13744 | 13744 | 13744 | 13744 | 13744 | 13744 | 13744 |
| **102 Psig** | 15703 | 15703 | 15703 | 15703 | 15703 | 15703 | 15703 | 15703 |
| **116 Psig** | 17663 | 17663 | 17663 | 17663 | 17663 | 17663 | 17663 | 17663 |
| **131 Psig** | 19623 | 19623 | 19623 | 19623 | 19623 | 19623 | 19623 | 19623 |
| **145 Psig** | 21583 | 21583 | 21583 | 21583 | 21583 | 21583 | 21583 | 21583 |

*Datos en azul corresponden a toma externa / Values in blue correspond to external impulse

d=0,05 lb/ft$^3$ AC 10

| Ø16 | Pressures (Psig/"WC) vs Flow (SCFH) | | | | | | | |
|---|---|---|---|---|---|---|---|---|
| **Pin / Pout** | **32 "WC** | **40 "WC** | **60 "WC** | **80 "WC** | **100 "WC** | **121 "WC** | **141 "WC** | **161 "WC** |
| **3 Psig** | 3535 | 3256 | 2302 | - | - | - | - | - |
| **4 Psig** | 4755 | 4575 | 3961 | 3237 | 2307 | - | - | - |
| **6 Psig** | 5697 | 5566 | 5081 | 4547 | 3970 | 3279 | 2349 | - |
| **7 Psig** | 6484 | 6385 | 5972 | 5532 | 5092 | 4607 | 4042 | 3346 |
| **11 Psig** | 8053 | 8004 | 7689 | 7367 | 7081 | 6795 | 6491 | 6156 |
| **15 Psig** | 9277 | 9259 | 8997 | 8734 | 8526 | 8332 | 8135 | 7924 |
| **22 Psig** | 11225 | 11225 | 10980 | 10758 | 10629 | 10535 | 10448 | 10361 |
| **29 Psig** | 12980 | 12980 | 12696 | 12440 | 12291 | 12194 | 12125 | 12074 |
| **44 Psig** | 16012 | 16012 | 15662 | 15346 | 15163 | 15043 | 14958 | 14896 |
| **58 Psig** | 23012 | 23012 | 22509 | 22055 | 21791 | 21618 | 21497 | 21407 |
| **73 Psig** | 27602 | 27602 | 26999 | 26454 | 26138 | 25931 | 25785 | 25677 |
| **87 Psig** | 32192 | 32192 | 31489 | 30854 | 30485 | 30243 | 30073 | 29947 |
| **102 Psig** | 36783 | 36783 | 35979 | 35253 | 34831 | 34556 | 34362 | 34217 |
| **116 Psig** | 41373 | 41373 | 40469 | 39653 | 39178 | 38868 | 38650 | 38488 |
| **131 Psig** | 45964 | 45964 | 44959 | 44052 | 43525 | 43181 | 42938 | 42758 |
| **145 Psig** | 0 | 0 | 49449 | 48451 | 47872 | 47493 | 47226 | 47028 |

*Datos en azul corresponden a toma externa / Values in blue correspond to external impulse

d=0,05 lb/ft$^3$ AC 10

DUNGS®
Combustion Controls

**Tablas de caudal / Flow tables (Imperial units)**

| Ø20 | Pressures (Psig/"WC) vs Flow (SCFH) | | | | | | | |
|---|---|---|---|---|---|---|---|---|
| **Pin / Pout** | **32 "WC** | **40 "WC** | **60 "WC** | **80 "WC** | **100 "WC** | **121 "WC** | **141 "WC** | **161 "WC** |
| **3 Psig** | 4417 | 3938 | 2729 | - | - | - | - | - |
| **4 Psig** | 5934 | 5526 | 4690 | 3832 | 2732 | - | - | - |
| **6 Psig** | 7101 | 6714 | 6007 | 5377 | 4695 | 3877 | 2778 | - |
| **7 Psig** | 8070 | 7691 | 7052 | 6533 | 6012 | 5440 | 4773 | 3951 |
| **11 Psig** | 9989 | 9608 | 9048 | 8669 | 8333 | 7996 | 7638 | 7244 |
| **15 Psig** | 11466 | 11076 | 10549 | 10241 | 9997 | 9770 | 9538 | 9291 |
| **22 Psig** | 13769 | 13325 | 12776 | 12519 | 12369 | 12259 | 12158 | 12056 |
| **29 Psig** | 15791 | 15282 | 14653 | 14357 | 14185 | 14073 | 13994 | 13935 |
| **44 Psig** | 19119 | 18503 | 17741 | 17383 | 17176 | 17040 | 16944 | 16873 |
| **58 Psig** | 27989 | 27087 | 25972 | 25448 | 25143 | 24944 | 24804 | 24700 |
| **73 Psig** | 33572 | 32491 | 31152 | 30524 | 30159 | 29920 | 29752 | 29627 |
| **87 Psig** | 39155 | 37894 | 36333 | 35600 | 35174 | 34896 | 34700 | 34554 |
| **102 Psig** | 0 | 0 | 41514 | 40677 | 40190 | 39872 | 39648 | 39482 |
| **116 Psig** | 0 | 0 | 0 | 45753 | 45206 | 44848 | 44596 | 44409 |
| **131 Psig** | 0 | 0 | 0 | 0 | 50221 | 49824 | 49544 | 49336 |
| **145 Psig** | 0 | 0 | 0 | 0 | 0 | 54800 | 54492 | 54263 |

*Datos en azul corresponden a toma externa / Values in blue correspond to external impulse

d=0,05 lb/ft$^3$ AC 10

| Ø25 | Pressures (Psig/"WC) vs Flow (SCFH) | | | | | | | |
|---|---|---|---|---|---|---|---|---|
| **Pin / Pout** | **32 "WC** | **40 "WC** | **60 "WC** | **80 "WC** | **100 "WC** | **121 "WC** | **141 "WC** | **161 "WC** |
| **3 Psig** | 4559 | 4064 | 2817 | - | - | - | - | - |
| **4 Psig** | 6122 | 5701 | 4839 | 3954 | 2818 | - | - | - |
| **6 Psig** | 7323 | 6925 | 6196 | 5545 | 4842 | 3999 | 2865 | - |
| **7 Psig** | 8320 | 7930 | 7270 | 6735 | 6199 | 5608 | 4921 | 4074 |
| **11 Psig** | 10290 | 9898 | 9320 | 8929 | 8584 | 8237 | 7868 | 7462 |
| **15 Psig** | 11801 | 11399 | 10857 | 10540 | 10289 | 10055 | 9816 | 9562 |
| **22 Psig** | 14143 | 13687 | 13124 | 12859 | 12705 | 12592 | 12489 | 12384 |
| **29 Psig** | 16185 | 15664 | 15019 | 14716 | 14540 | 14425 | 14344 | 14284 |
| **44 Psig** | 25524 | 24702 | 23685 | 23207 | 22929 | 22748 | 22620 | 22525 |
| **58 Psig** | 31885 | 30858 | 29587 | 28990 | 28643 | 28417 | 28257 | 28138 |
| **73 Psig** | 38245 | 37013 | 35489 | 34773 | 34357 | 34085 | 33894 | 33751 |
| **87 Psig** | 0 | 0 | 41391 | 40556 | 40071 | 39754 | 39530 | 39364 |
| **102 Psig** | 0 | 0 | 0 | 46339 | 45784 | 45422 | 45167 | 44978 |
| **116 Psig** | 0 | 0 | 0 | 0 | 51498 | 51091 | 50804 | 50591 |
| **131 Psig** | 0 | 0 | 0 | 0 | 0 | 56759 | 56441 | 56204 |
| **145 Psig** | 0 | 0 | 0 | 0 | 0 | 0 | 0 | 0 |

*Datos en azul corresponden a toma externa / Values in blue correspond to external impulse

d=0,05 lb/ft$^3$ AC 10

Plano CAD, no cambiar manualmente!
CAD-Drawing, do not change manually!

This design and/or document is proprietary and protected by copyright.
It may not, without our prior express consent, be copied nor transmitted
to any third party. It must be returned to us upon discharge of the order.

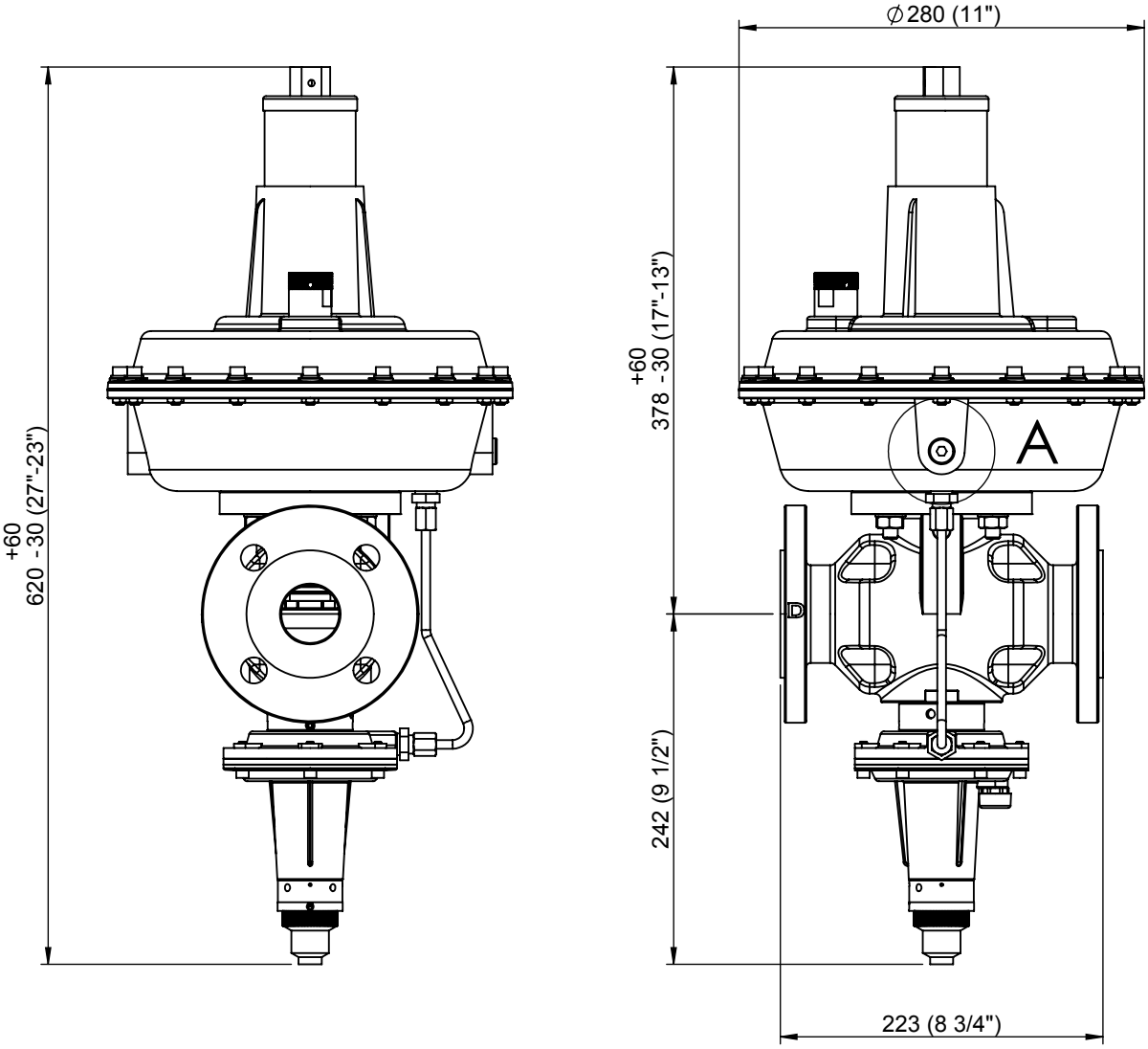


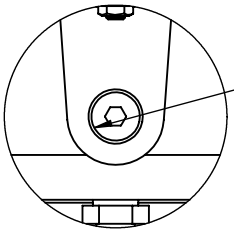

External impulse connection on request

DETALLE A
ESCALA 2 : 5

3D

| Rev | Descripción Modificación | Fecha | Nom |
|---|---|---|---|
| | | | |
| | | | |
| | | | |
| | | | |
| | | | |
| | | | |
| | | | |
| | | | |
| | | | |
| | | | |
| | | | |
| | | | |

**Karl Dungs S.L.U.**
**Combustion Controls**
Avinguda de Can Roqueta, 15 - Pol. Can Roqueta
E-08202 - Sabadell
Barcelona - ESPAÑA

| | Fecha | Nombre | Firmado |
|---|---|---|---|
| Dibujado | 31/10/2018 | A.Rof | |
| Verificado | 31/10/2018 | J.Inglés | |
| Aprobado | 31/10/2018 | GX | |

Tolerancias según ISO 2768
TOLERANCIAS GENERALES ISO 2768-mK
(MEDIUM) TOLERANCIAS LINEALES
Roscas a 6g/6H y longitudes +1.0/-0

Rz 12.5 ( )

Eliminar rebabas y cantos vivos

Escala: 1:5

Material:

Acabado:

Tratamiento:

Peso: 19004.77 gr.

Descripción:
DIMENSIONS FRM-NOC100040ND/MD

| Código Pieza | Rev. | Formato | Pág. |
|---|---|---|---|
| FRM-NOC100040ND_MD | 0 | A4 | 1 de 1 |

Dimensiones en mm (inch)

Queda prohibida la preproducción total o parcial de este documento
y del contenido del mismo sin la autorización escrita de Karl Dungs S.L.U.
Todos los derechos reservados.

ESPECIFICACIONES TÉCNICAS / TECHNICAL SPECIFICATION

DUNGS®
Combustion Controls

Regulador de presión con válvula de seguridad, conforme a las normas EN-334 y EN-14382 /
Pressure regulator with safety shut-off valve, in accordance with the standards EN-334 and EN-14382

| | |
|---|---|
| Presión de operación / Operating pressure | Max. 10 Bar / 1000 kPa / 145 Psig |
| Rango de presión de salida FRM / Outlet pressure range FRM | Ver tabla de Selección / See Set point Table |
| Temperatura máxima ambiental / Ambient maximum temperature | 60 ºC / 145ºF |
| Temperatura minima ambiental / Ambient minimum temperature | -20 ºC / -10 ºF |
| Fluido / Flow | Gas Natural, GLP / Natural Gas, LPG |
| Posición de montaje / Mounting Position | 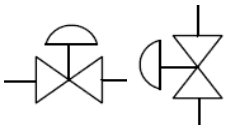 *Puede variar el tarado para presiones inferiores a 300 mbar / for pressures below 300 mbar setpoint can be altered |
| Tipo de Construcción / Construction Type: | DS (De resistencia diferencial) / DS (Diferential strenght) |
| Materiales / Materials — Cuerpo / Body | Hierro fundido / Cast iron EN GJS 500-7 or EN GJS 400-15 |
| Actuador / Actuator | Aluminio / Aluminium |
| Membranas / Membranes | NBR EN549 conform |
| Diametro Nominal / Nominal Diameter | Bridas de conexión PN 25 según EN1092-1 / Connecting flange PN 25 according to EN1092-1 DN 40 |

| Codigo de producto / Product's code | BSP / SAV | BSP | NPT / SAV | NPT |
|---|---|---|---|---|
| | 279079 | 279091 | 280254 | 280266 |

Producto diseñado acorde a las normas EN-334 y EN-14382 / Product designed in accordance to EN-334 and EN-14382
Categoría III (Regulador) y IV (Válvula de seguridad) acorde a PED 2014/68/UE & CRN B51.14 pendiente
Product category III (Regulator) and IV (Safety valve) according to PED 2014/68/UE & CRN B51.14 pending

| Muelle de regulación / Regulation spring | | | | | | | | | | | |
|---|---|---|---|---|---|---|---|---|---|---|---|
| Ø hilo / wire | Rango / Range (min-Max) | | | | | | | | | Color/Color | codigo/code |
| 4,5 | 300 | 500 | (mbar) | 30 | 50 | (kPa) | 4,4 | 7,3 | (psig) | blanco/white | 286355 |
| 5 | 450 | 700 | (mbar) | 45 | 70 | (kPa) | 6,5 | 10,2 | (psig) | amarillo/yellow | 286356 |
| 5,5 | 550 | 900 | (mbar) | 55 | 90 | (kPa) | 8 | 13,1 | (psig) | azul/blue | 286357 |
| 6 | 650 | 1150 | (mbar) | 65 | 115 | (kPa) | 9,4 | 16,7 | (psig) | negro/black | 286358 |
| 6,5 | 1000 | 1500 | (mbar) | 100 | 150 | (kPa) | 14,5 | 21,8 | (psig) | lila/purple | 286359 |

| Muelle de mínima presión / Under pressure spring (UPSO) | | | | | | | | | | | |
|---|---|---|---|---|---|---|---|---|---|---|---|
| Ø hilo / wire | Rango / Range (min-Max) | | | | | | | | | Color/Color | codigo/code |
| 2,5 | 150 | 500 | (mbar) | 15 | 50 | (kPa) | 2,2 | 7,3 | (psig) | lila/purple | 270178 |
| 2,8 | 300 | 1000 | (mbar) | 30 | 100 | (kPa) | 4,4 | 14,5 | (psig) | naranja/orange | 270179 |
| 3 | 800 | 1400 | (mbar) | 80 | 140 | (kPa) | 11,6 | 20,3 | (psig) | plata/silver | 270180 |

| Muelle de máxima presión / Over pressure spring (OPSO) | | | | | | | | | | | |
|---|---|---|---|---|---|---|---|---|---|---|---|
| Ø hilo / wire | Rango / Range (min-Max) | | | | | | | | | Color/Color | codigo/code |
| 3,5 | 500 | 1000 | (mbar) | 50 | 100 | (kPa) | 7,3 | 14,5 | (psig) | azul/blue | 270185 |
| 3,75 | 700 | 1300 | (mbar) | 70 | 130 | (kPa) | 10,2 | 18,9 | (psig) | negro/black | 270186 |
| 4 | 1000 | 1800 | (mbar) | 100 | 180 | (kPa) | 14,5 | 26,1 | (psig) | lila/purple | 270187 |
| 4,5 | 1300 | 2500 | (mbar) | 130 | 250 | (kPa) | 18,9 | 36,3 | (psig) | naranja/orange | 270188 |
| 4,8 | 1800 | 3500 | (mbar) | 180 | 350 | (kPa) | 26,1 | 50,8 | (psig) | rosa/pink | 270189 |

| Orificios / Orifices | | | | | | | | | | | |
|---|---|---|---|---|---|---|---|---|---|---|---|
| Medida/size | Ø10 | | Ø12 | | Ø16 | | Ø20 | | Ø25 | | |
| $P_{umax}$* (bar/psig) | 10 | 145 | 10 | 145 | 10 | 145 | 10 | 145 | 10 | 145 | |

Regulador de gas para media presión / Gas regulator for medium pressure
FRM-NOC 100040HD / SAV HD

*Máxima presión de entrada / Maximum inlet pressure

DUNGS®
Combustion Controls

**Tablas de caudal / Flow tables (SI units)**

| Ø10 | Pressures (Bar) vs Flow ($Nm^3/h$) | | | | | | | |
|---|---|---|---|---|---|---|---|---|
| **Pin / Pout** | **0,3** | **0,4** | **0,5** | **0,7** | **0,9** | **1,1** | **1,3** | **1,5** |
| **0,2** | - | - | - | - | - | - | - | - |
| **0,3** | - | - | - | - | - | - | - | - |
| **0,4** | 40 | - | - | - | - | - | - | - |
| **0,5** | 57 | 42 | - | - | - | - | - | - |
| **0,75** | 85 | 78 | 68 | 32 | - | - | - | - |
| **1** | 106 | 102 | 97 | 80 | 49 | - | - | - |
| **1,5** | 139 | 138 | 137 | 130 | 119 | 102 | 75 | - |
| **2** | 167 | 167 | 167 | 166 | 161 | 153 | 141 | 124 |
| **3** | 223 | 223 | 223 | 223 | 223 | 222 | 219 | 214 |
| **4** | 278 | 278 | 278 | 278 | 278 | 278 | 277 | 277 |
| **5** | 334 | 334 | 334 | 334 | 334 | 334 | 333 | 332 |
| **6** | 389 | 389 | 389 | 389 | 389 | 389 | 388 | 387 |
| **7** | 445 | 445 | 445 | 445 | 445 | 445 | 443 | 442 |
| **8** | 500 | 500 | 500 | 500 | 500 | 500 | 499 | 497 |
| **9** | 556 | 556 | 556 | 556 | 556 | 556 | 554 | 552 |
| **10** | 611 | 611 | 611 | 611 | 611 | 611 | 609 | 608 |

*Datos en azul corresponden a toma externa / Values in blue correspond to external impulse

d=0,83 $Kg/m^3$ AC 10

| Ø16 | Pressures (Bar) vs Flow ($Nm^3/h$) | | | | | | | |
|---|---|---|---|---|---|---|---|---|
| **Pin / Pout** | **0,3** | **0,4** | **0,5** | **0,7** | **0,9** | **1,1** | **1,3** | **1,5** |
| **0,2** | - | - | - | - | - | - | - | - |
| **0,3** | - | - | - | - | - | - | - | - |
| **0,4** | 69 | - | - | - | - | - | - | - |
| **0,5** | 98 | 70 | - | - | - | - | - | - |
| **0,75** | 146 | 131 | 113 | 53 | - | - | - | - |
| **1** | 181 | 170 | 159 | 129 | 78 | - | - | - |
| **1,5** | 236 | 229 | 223 | 209 | 190 | 162 | 119 | - |
| **2** | 280 | 274 | 270 | 264 | 254 | 241 | 221 | 194 |
| **3** | 366 | 358 | 354 | 348 | 345 | 343 | 338 | 330 |
| **4** | 449 | 439 | 434 | 427 | 424 | 421 | 420 | 419 |
| **5** | 529 | 517 | 510 | 503 | 499 | 496 | 494 | 493 |
| **6** | 605 | 592 | 584 | 575 | 571 | 568 | 566 | 564 |
| **7** | 678 | 663 | 654 | 645 | 639 | 636 | 634 | 632 |
| **8** | 748 | 731 | 722 | 711 | 705 | 701 | 699 | 697 |
| **9** | 814 | 796 | 786 | 774 | 768 | 764 | 761 | 759 |
| **10** | 1068 | 1044 | 1031 | 1015 | 1007 | 1002 | 998 | 995 |

*Datos en azul corresponden a toma externa / Values in blue correspond to external impulse

d=0,83 $Kg/m^3$ AC 10

DUNGS® Combustion Controls

**Tablas de caudal / Flow tables (SI units)**

| Ø20 | Pressures (Bar) vs Flow ($Nm^3/h$) | | | | | | | |
|---|---|---|---|---|---|---|---|---|
| **Pin / Pout** | **0,3** | **0,4** | **0,5** | **0,7** | **0,9** | **1,1** | **1,3** | **1,5** |
| **0,2** | - | - | - | - | - | - | - | - |
| **0,3** | - | - | - | - | - | - | - | - |
| **0,4** | 81 | - | - | - | - | - | - | - |
| **0,5** | 115 | 82 | - | - | - | - | - | - |
| **0,75** | 170 | 152 | 131 | 61 | - | - | - | - |
| **1** | 209 | 196 | 183 | 149 | 90 | - | - | - |
| **1,5** | 267 | 259 | 252 | 236 | 215 | 183 | 135 | - |
| **2** | 312 | 305 | 301 | 293 | 283 | 268 | 246 | 216 |
| **3** | 393 | 384 | 379 | 373 | 370 | 368 | 363 | 354 |
| **4** | 462 | 452 | 446 | 440 | 436 | 434 | 432 | 431 |
| **5** | 659 | 644 | 636 | 626 | 621 | 618 | 616 | 614 |
| **6** | 769 | 751 | 741 | 730 | 724 | 721 | 718 | 716 |
| **7** | 878 | 859 | 847 | 835 | 828 | 823 | 821 | 818 |
| **8** | 988 | 966 | 953 | 939 | 931 | 926 | 923 | 921 |
| **9** | 1097 | 1073 | 1059 | 1043 | 1034 | 1029 | 1025 | 1023 |
| **10** | 1207 | 1180 | 1164 | 1147 | 1138 | 1132 | 1128 | 1125 |

*Datos en azul corresponden a toma externa / Values in blue correspond to external impulse

d=0,83 Kg/m AC 10

| Ø25 | Pressures (Bar) vs Flow ($Nm^3/h$) | | | | | | | |
|---|---|---|---|---|---|---|---|---|
| **Pin / Pout** | **0,3** | **0,4** | **0,5** | **0,7** | **0,9** | **1,1** | **1,3** | **1,5** |
| **0,2** | - | - | - | - | - | - | - | - |
| **0,3** | - | - | - | - | - | - | - | - |
| **0,4** | 84 | - | - | - | - | - | - | - |
| **0,5** | 118 | 85 | - | - | - | - | - | - |
| **0,75** | 174 | 155 | 134 | 63 | - | - | - | - |
| **1** | 213 | 200 | 186 | 151 | 91 | - | - | - |
| **1,5** | 268 | 260 | 253 | 237 | 215 | 184 | 136 | - |
| **2** | 308 | 302 | 298 | 290 | 280 | 265 | 243 | 214 |
| **3** | 480 | 470 | 463 | 456 | 453 | 450 | 443 | 433 |
| **4** | 600 | 587 | 579 | 570 | 565 | 563 | 561 | 559 |
| **5** | 720 | 704 | 694 | 684 | 678 | 675 | 672 | 671 |
| **6** | 839 | 821 | 810 | 798 | 791 | 787 | 784 | 782 |
| **7** | 0 | 0 | 925 | 911 | 904 | 899 | 896 | 894 |
| **8** | 0 | 0 | 0 | 1025 | 1017 | 1011 | 1008 | 1005 |
| **9** | 0 | 0 | 0 | 0 | 1130 | 1124 | 1120 | 1117 |
| **10** | 0 | 0 | 0 | 0 | 0 | 1236 | 1231 | 1228 |

*Datos en azul corresponden a toma externa / Values in blue correspond to external impulse

d=0,83 $Kg/m^3$ AC 10

DUNGS®
Combustion Controls

**Tablas de caudal / Flow tables (Imperial units)**

| Ø10 | Pressures (Psig/"WC) vs Flow (SCFH) | | | | | | | |
|---|---|---|---|---|---|---|---|---|
| **Pin / Pout** | **4 Psig** | **6 Psig** | **7 Psig** | **10 Psig** | **13 Psig** | **16 Psig** | **19 Psig** | **22 Psig** |
| **3 Psig** | - | - | - | - | - | - | - | - |
| **4 Psig** | - | - | - | - | - | - | - | - |
| **6 Psig** | 1420 | - | - | - | - | - | - | - |
| **7 Psig** | 2009 | 1473 | - | - | - | - | - | - |
| **11 Psig** | 3013 | 2756 | 2411 | 1147 | - | - | - | - |
| **15 Psig** | 3758 | 3609 | 3409 | 2810 | 1714 | - | - | - |
| **22 Psig** | 4920 | 4886 | 4821 | 4588 | 4199 | 3603 | 2657 | - |
| **29 Psig** | 5905 | 5905 | 5905 | 5849 | 5686 | 5405 | 4970 | 4367 |
| **44 Psig** | 7864 | 7864 | 7864 | 7864 | 7864 | 7853 | 7746 | 7564 |
| **58 Psig** | 9824 | 9824 | 9824 | 9824 | 9824 | 9824 | 9791 | 9765 |
| **73 Psig** | 11784 | 11784 | 11784 | 11784 | 11784 | 11784 | 11744 | 11713 |
| **87 Psig** | 13744 | 13744 | 13744 | 13744 | 13744 | 13744 | 13697 | 13661 |
| **102 Psig** | 15703 | 15703 | 15703 | 15703 | 15703 | 15703 | 15650 | 15609 |
| **116 Psig** | 17663 | 17663 | 17663 | 17663 | 17663 | 17663 | 17603 | 17557 |
| **131 Psig** | 19623 | 19623 | 19623 | 19623 | 19623 | 19623 | 19556 | 19505 |
| **145 Psig** | 21583 | 21583 | 21583 | 21583 | 21583 | 21583 | 21510 | 21453 |

*Datos en azul corresponden a toma externa / Values in blue correspond to external impulse

d=0,05 lb/ft$^3$ AC 10

| Ø16 | Pressures (Psig/"WC) vs Flow (SCFH) | | | | | | | |
|---|---|---|---|---|---|---|---|---|
| **Pin / Pout** | **4 Psig** | **6 Psig** | **7 Psig** | **10 Psig** | **13 Psig** | **16 Psig** | **19 Psig** | **22 Psig** |
| **3 Psig** | - | - | - | - | - | - | - | - |
| **4 Psig** | - | - | - | - | - | - | - | - |
| **6 Psig** | 2448 | - | - | - | - | - | - | - |
| **7 Psig** | 3456 | 2478 | - | - | - | - | - | - |
| **11 Psig** | 5161 | 4616 | 3984 | 1868 | - | - | - | - |
| **15 Psig** | 6409 | 6018 | 5609 | 4555 | 2756 | - | - | - |
| **22 Psig** | 8317 | 8076 | 7863 | 7372 | 6692 | 5713 | 4211 | - |
| **29 Psig** | 9893 | 9673 | 9545 | 9314 | 8980 | 8493 | 7808 | 6861 |
| **44 Psig** | 12941 | 12652 | 12485 | 12299 | 12199 | 12118 | 11950 | 11670 |
| **58 Psig** | 15870 | 15516 | 15312 | 15084 | 14960 | 14883 | 14830 | 14791 |
| **73 Psig** | 18682 | 18266 | 18025 | 17757 | 17611 | 17520 | 17457 | 17412 |
| **87 Psig** | 21377 | 20900 | 20624 | 20318 | 20151 | 20047 | 19975 | 19923 |
| **102 Psig** | 23953 | 23419 | 23110 | 22767 | 22580 | 22463 | 22383 | 22324 |
| **116 Psig** | 26412 | 25823 | 25482 | 25104 | 24898 | 24769 | 24680 | 24616 |
| **131 Psig** | 28753 | 28112 | 27741 | 27329 | 27105 | 26965 | 26868 | 26798 |
| **145 Psig** | 37717 | 36876 | 36389 | 35848 | 35555 | 35370 | 35244 | 35151 |

*Datos en azul corresponden a toma externa / Values in blue correspond to external impulse

d=0,05 lb/ft$^3$ AC 10

DUNGS®
Combustion Controls

**Tablas de caudal / Flow tables (Imperial units)**

| Ø20 | Pressures (Psig/"WC) vs Flow (SCFH) | | | | | | | |
|---|---|---|---|---|---|---|---|---|
| **Pin / Pout** | **4 Psig** | **6 Psig** | **7 Psig** | **10 Psig** | **13 Psig** | **16 Psig** | **19 Psig** | **22 Psig** |
| **3 Psig** | - | - | - | - | - | - | - | - |
| **4 Psig** | - | - | - | - | - | - | - | - |
| **6 Psig** | 2877 | - | - | - | - | - | - | - |
| **7 Psig** | 4048 | 2903 | - | - | - | - | - | - |
| **11 Psig** | 5996 | 5363 | 4629 | 2170 | - | - | - | - |
| **15 Psig** | 7383 | 6933 | 6463 | 5247 | 3175 | - | - | - |
| **22 Psig** | 9419 | 9147 | 8905 | 8349 | 7578 | 6469 | 4769 | - |
| **29 Psig** | 11007 | 10761 | 10619 | 10363 | 9991 | 9448 | 8687 | 7633 |
| **44 Psig** | 13866 | 13557 | 13378 | 13179 | 13071 | 12985 | 12805 | 12505 |
| **58 Psig** | 16331 | 15966 | 15756 | 15521 | 15394 | 15314 | 15260 | 15220 |
| **73 Psig** | 23268 | 22749 | 22449 | 22115 | 21934 | 21820 | 21742 | 21685 |
| **87 Psig** | 27138 | 26533 | 26182 | 25793 | 25582 | 25449 | 25358 | 25292 |
| **102 Psig** | 31007 | 30316 | 29916 | 29471 | 29230 | 29078 | 28974 | 28898 |
| **116 Psig** | 34877 | 34099 | 33649 | 33149 | 32877 | 32707 | 32590 | 32505 |
| **131 Psig** | 38746 | 37883 | 37382 | 36827 | 36525 | 36336 | 36206 | 36111 |
| **145 Psig** | 42616 | 41666 | 41116 | 40505 | 40173 | 39965 | 39822 | 39718 |

*Datos en azul corresponden a toma externa / Values in blue correspond to external impulse

d=0,05 lb/ft$^3$ AC 10

| Ø25 | Pressures (Psig/"WC) vs Flow (SCFH) | | | | | | | |
|---|---|---|---|---|---|---|---|---|
| **Pin / Pout** | **4 Psig** | **6 Psig** | **7 Psig** | **10 Psig** | **13 Psig** | **16 Psig** | **19 Psig** | **22 Psig** |
| **3 Psig** | - | - | - | - | - | - | - | - |
| **4 Psig** | - | - | - | - | - | - | - | - |
| **6 Psig** | 2969 | - | - | - | - | - | - | - |
| **7 Psig** | 4169 | 2990 | - | - | - | - | - | - |
| **11 Psig** | 6137 | 5490 | 4737 | 2221 | - | - | - | - |
| **15 Psig** | 7510 | 7052 | 6573 | 5337 | 3230 | - | - | - |
| **22 Psig** | 9455 | 9181 | 8939 | 8381 | 7607 | 6494 | 4787 | - |
| **29 Psig** | 10893 | 10650 | 10510 | 10256 | 9888 | 9351 | 8597 | 7554 |
| **44 Psig** | 16957 | 16579 | 16360 | 16117 | 15985 | 15880 | 15659 | 15292 |
| **58 Psig** | 21182 | 20710 | 20437 | 20133 | 19968 | 19865 | 19794 | 19742 |
| **73 Psig** | 25408 | 24841 | 24513 | 24149 | 23951 | 23827 | 23742 | 23680 |
| **87 Psig** | 29633 | 28973 | 28590 | 28165 | 27935 | 27790 | 27690 | 27618 |
| **102 Psig** | 0 | 0 | 32667 | 32181 | 31918 | 31752 | 31639 | 31556 |
| **116 Psig** | 0 | 0 | 0 | 36198 | 35901 | 35715 | 35587 | 35494 |
| **131 Psig** | 0 | 0 | 0 | 0 | 39884 | 39678 | 39536 | 39432 |
| **145 Psig** | 0 | 0 | 0 | 0 | 0 | 43640 | 43484 | 43370 |

*Datos en azul corresponden a toma externa / Values in blue correspond to external impulse

d=0,05 lb/ft$^3$ AC 10

Plano CAD, no cambiar manualmente!
CAD-Drawing, do not change manually!

This design and/or document is proprietary and protected by copyright.
It may not, without our prior express consent, be copied nor transmitted
to any third party. It must be returned to us upon discharge of the order.

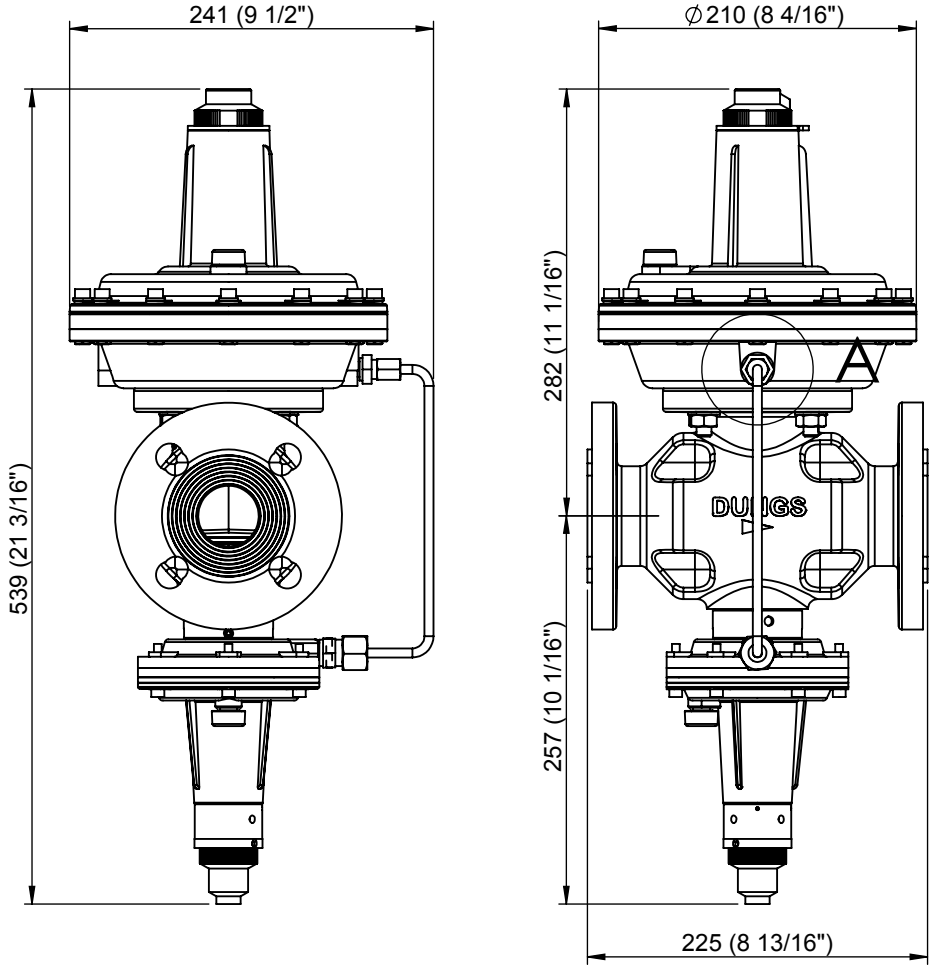


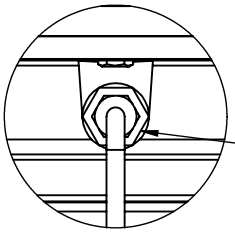

External impulse
connection on request

DETALLE A
ESCALA 2 : 5

3D

| Rev | Descripción Modificación | Fecha | Nom |
|---|---|---|---|
| | | | |
| | | | |
| | | | |
| | | | |
| | | | |
| | | | |
| | | | |
| | | | |
| | | | |
| | | | |
| | | | |
| | | | |

**Karl Dungs S.L.U.**
**Combustion Controls**
Avinguda de Can Roqueta, 15 - Pol. Can Roqueta
E-08202 - Sabadell
Barcelona - ESPAÑA

| | Fecha | Nombre | Firmado |
|---|---|---|---|
| Dibujado | 31/10/2018 | A.Rof | |
| Verificado | 31/10/2018 | J.Inglés | |
| Aprobado | 31/10/2018 | GX | |

Tolerancias según ISO 2768
TOLERANCIAS GENERALES ISO 2768-mK
(MEDIUM) TOLERANCIAS LINEALES
Roscas a 6g/6H y longitudes +1.0/-0

Rz 12.5 ( )

Eliminar rebabas y cantos vivos

Escala: 1:5

Material:

Acabado:

Tratamiento:

Peso: 15676.78 gr.

Descripción:
DIMENSIONS FRM-NOC100040HD

| Código Pieza | Rev. | Formato | Pág. |
|---|---|---|---|
| FRM-NOC100040HD | 0 | A4 | 1 de 1 |

Dimensiones en mm (inch)

Queda prohibida la preproducción total o parcial de este documento
y del contenido del mismo sin la autorización escrita de Karl Dungs S.L.U.
Todos los derechos reservados.

## ESPECIFICACIONES TÉCNICAS / TECHNICAL SPECIFICATION

DUNGS®
Combustion Controls

Regulador de presión con válvula de seguridad, conforme a las normas EN-334 y EN-14382 /
Pressure regulator with safety shut-off valve, in accordance with the standards EN-334 and EN-14382

| | |
|---|---|
| Presión de operación / Operating pressure | Max. 10 Bar / 1000 kPa / 145 Psig |
| Rango de presión de salida FRM / Outlet pressure range FRM | Ver tabla de Selección / See Set point Table |
| Temperatura máxima ambiental / Ambient maximum temperature | 60 ºC / 145ºF |
| Temperatura minima ambiental / Ambient minimum temperature | -20 ºC / -10 ºF |
| Fluido / Flow | Gas Natural, GLP / Natural Gas, LPG |
| Posición de montaje / Mounting Position | 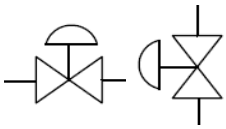 *Puede variar el tarado para presiones inferiores a 300 mbar / for pressures below 300 mbar setpoint can be altered |
| Tipo de Construcción / Construction Type: | DS (De resistencia diferencial) / DS (Diferential strenght) |
| Materiales / Materials — Cuerpo / Body | Hierro fundido / Cast iron EN GJS 500-7 or EN GJS 400-15 |
| Actuador / Actuator | Aluminio / Aluminium |
| Membranas / Membranes | NBR EN549 conform |
| Diametro Nominal / Nominal Diameter | Bridas de conexión PN 25 según EN1092-1<br>Connecting flange PN 25 according to EN1092-1<br>DN 40 |

| Codigo de producto / Product's code | BSP / SAV | BSP | NPT / SAV | NPT |
|---|---|---|---|---|
| | 279080 | 279092 | 280255 | 280267 |

Producto diseñado acorde a las normas EN-334 y EN-14382 / Product designed in accordance to EN-334 and EN-14382
Categoría III (Regulador) y IV (Válvula de seguridad) acorde a PED 2014/68/UE & CRN B51.14 pendiente
Product category III (Regulator) and IV (Safety valve) according to PED 2014/68/UE & CRN B51.14 pending

| Muelle de regulación / Regulation spring | | | | | | | | | | | |
|---|---|---|---|---|---|---|---|---|---|---|---|
| Ø hilo / wire | Rango / Range (min-Max) | | | | | | | | | Color/Color | codigo/code |
| 10 | 1000 | 1600 | (mbar) | 100 | 160 | (kPa) | 14,5 | 23,2 | (psig) | lila/purple | 286389 |
| 11 | 1500 | 2400 | (mbar) | 150 | 240 | (kPa) | 21,8 | 34,8 | (psig) | naranja/orange | 286390 |
| 12 | 3200 | 3600 | (mbar) | 320 | 360 | (kPa) | 46,4 | 52,2 | (psig) | rosa/pink | 286393 |
| 13 | 3500 | 4000 | (mbar) | 350 | 400 | (kPa) | 50,8 | 58 | (psig) | rojo/red | 286394 |

| Muelle de mínima presión / Under pressure spring (UPSO) | | | | | | | | | | | |
|---|---|---|---|---|---|---|---|---|---|---|---|
| Ø hilo / wire | Rango / Range (min-Max) | | | | | | | | | Color/Color | codigo/code |
| 2,5 | 150 | 500 | (mbar) | 15 | 50 | (kPa) | 2,2 | 7,3 | (psig) | lila/purple | 270178 |
| 2,8 | 300 | 1000 | (mbar) | 30 | 100 | (kPa) | 4,4 | 14,5 | (psig) | naranja/orange | 270179 |
| 3 | 800 | 1400 | (mbar) | 80 | 140 | (kPa) | 11,6 | 20,3 | (psig) | plata/silver | 270180 |
| 3,5 | 1200 | 3000 | (mbar) | 120 | 300 | (kPa) | 17,4 | 43,5 | (psig) | rosa/pink | 270124 |

| Muelle de máxima presión / Over pressure spring (OPSO) | | | | | | | | | | | |
|---|---|---|---|---|---|---|---|---|---|---|---|
| Ø hilo / wire | Rango / Range (min-Max) | | | | | | | | | Color/Color | codigo/code |
| 4,5 | 1300 | 2500 | (mbar) | 130 | 250 | (kPa) | 18,9 | 36,3 | (psig) | naranja/orange | 270188 |
| 4,8 | 1800 | 3500 | (mbar) | 180 | 350 | (kPa) | 26,1 | 50,8 | (psig) | rosa/pink | 270189 |
| 5 | 2500 | 5000 | (mbar) | 250 | 500 | (kPa) | 36,3 | 72,5 | (psig) | blanco/white | 271114 |

| Orificios / Orifices | | | | | | | | | | |
|---|---|---|---|---|---|---|---|---|---|---|
| Medida/size | Ø10 | | Ø16 | | Ø20 | | Ø25 | | | |
| $P_{umax}$* (bar/psig) | 10 | 145 | 10 | 145 | 10 | 145 | 10 | 145 | | |

*Máxima presión de entrada / Maximum inlet pressure

Regulador de gas para media presión / Gas regulator for medium pressure
**FRM-NOC 100040UHD / SAV HD**

DUNGS®
Combustion Controls

**Tablas de caudal / Flow tables (SI units)**

| Ø10 | Pressures (Bar) vs Flow ($Nm^3/h$) | | | | | | | |
|---|---|---|---|---|---|---|---|---|
| **Pin / Pout** | **1** | **1,25** | **1,5** | **1,75** | **2** | **2,5** | **3** | **4** |
| **0,2** | - | - | - | - | - | - | - | - |
| **0,3** | - | - | - | - | - | - | - | - |
| **0,4** | - | - | - | - | - | - | - | - |
| **0,5** | - | - | - | - | - | - | - | - |
| **0,75** | - | - | - | - | - | - | - | - |
| **1** | - | - | - | - | - | - | - | - |
| **1,5** | 112 | 84 | - | - | - | - | - | - |
| **2** | 159 | 146 | 126 | 93 | - | - | - | - |
| **3** | 225 | 223 | 217 | 208 | 194 | 148 | - | - |
| **4** | 281 | 281 | 281 | 279 | 275 | 257 | 224 | - |
| **5** | 337 | 337 | 337 | 337 | 337 | 332 | 317 | 251 |
| **6** | 393 | 393 | 393 | 393 | 393 | 393 | 389 | 355 |
| **7** | 449 | 449 | 449 | 449 | 449 | 449 | 449 | 434 |
| **8** | 505 | 505 | 505 | 505 | 505 | 505 | 505 | 502 |
| **9** | 561 | 561 | 561 | 561 | 561 | 561 | 561 | 561 |
| **10** | 617 | 617 | 617 | 617 | 617 | 617 | 617 | 617 |

*Datos en azul corresponden a toma externa / Values in blue correspond to external impulse

d=0,83 $Kg/m^3$ AC 10

| Ø16 | Pressures (Bar) vs Flow ($Nm^3/h$) | | | | | | | |
|---|---|---|---|---|---|---|---|---|
| **Pin / Pout** | **1** | **1,25** | **1,5** | **1,75** | **2** | **2,5** | **3** | **4** |
| **0,2** | - | - | - | - | - | - | - | - |
| **0,3** | - | - | - | - | - | - | - | - |
| **0,4** | - | - | - | - | - | - | - | - |
| **0,5** | - | - | - | - | - | - | - | - |
| **0,75** | - | - | - | - | - | - | - | - |
| **1** | - | - | - | - | - | - | - | - |
| **1,5** | 185 | 147 | - | - | - | - | - | - |
| **2** | 261 | 255 | 229 | 175 | - | - | - | - |
| **3** | 369 | 389 | 397 | 392 | 376 | 297 | - | - |
| **4** | 461 | 491 | 512 | 526 | 531 | 515 | 461 | - |
| **5** | 553 | 588 | 615 | 635 | 651 | 665 | 652 | 532 |
| **6** | 645 | 686 | 717 | 740 | 759 | 787 | 798 | 752 |
| **7** | 737 | 784 | 819 | 846 | 867 | 899 | 921 | 921 |
| **8** | 829 | 882 | 921 | 951 | 975 | 1011 | 1036 | 1063 |
| **9** | 921 | 980 | 1023 | 1057 | 1084 | 1123 | 1151 | 1188 |
| **10** | 1013 | 1078 | 1126 | 1163 | 1192 | 1235 | 1266 | 1307 |

*Datos en azul corresponden a toma externa / Values in blue correspond to external impulse

d=0,83 $Kg/m^3$ AC 10

DUNGS®
Combustion Controls

**Tablas de caudal / Flow tables (SI units)**

| Ø20 | Pressures (Bar) vs Flow ($Nm^3/h$) | | | | | | | |
|---|---|---|---|---|---|---|---|---|
| **Pin / Pout** | **1** | **1,25** | **1,5** | **1,75** | **2** | **2,5** | **3** | **4** |
| **0,2** | - | - | - | - | - | - | - | - |
| **0,3** | - | - | - | - | - | - | - | - |
| **0,4** | - | - | - | - | - | - | - | - |
| **0,5** | - | - | - | - | - | - | - | - |
| **0,75** | - | - | - | - | - | - | - | - |
| **1** | - | - | - | - | - | - | - | - |
| **1,5** | 212 | 169 | - | - | - | - | - | - |
| **2** | 298 | 291 | 262 | 201 | - | - | - | - |
| **3** | 417 | 440 | 448 | 443 | 424 | 336 | - | - |
| **4** | 514 | 547 | 571 | 587 | 592 | 574 | 513 | - |
| **5** | 608 | 647 | 676 | 698 | 716 | 731 | 717 | 585 |
| **6** | 700 | 745 | 778 | 804 | 824 | 854 | 866 | 816 |
| **7** | 790 | 840 | 878 | 906 | 929 | 963 | 987 | 986 |
| **8** | 876 | 932 | 974 | 1006 | 1031 | 1069 | 1096 | 1124 |
| **9** | 961 | 1022 | 1067 | 1102 | 1130 | 1171 | 1201 | 1239 |
| **10** | 1042 | 1109 | 1158 | 1196 | 1226 | 1271 | 1303 | 1345 |

*Datos en azul corresponden a toma externa / Values in blue correspond to external impulse

d=0,83 $Kg/m^3$ AC 10

| Ø25 | Pressures (Bar) vs Flow ($Nm^3/h$) | | | | | | | |
|---|---|---|---|---|---|---|---|---|
| **Pin / Pout** | **1** | **1,25** | **1,5** | **1,75** | **2** | **2,5** | **3** | **4** |
| **0,2** | - | - | - | - | - | - | - | - |
| **0,3** | - | - | - | - | - | - | - | - |
| **0,4** | - | - | - | - | - | - | - | - |
| **0,5** | - | - | - | - | - | - | - | - |
| **0,75** | - | - | - | - | - | - | - | - |
| **1** | - | - | - | - | - | - | - | - |
| **1,5** | 243 | 193 | - | - | - | - | - | - |
| **2** | 334 | 326 | 293 | 225 | - | - | - | - |
| **3** | 447 | 472 | 481 | 475 | 455 | 360 | - | - |
| **4** | 527 | 561 | 586 | 602 | 607 | 589 | 527 | - |
| **5** | 594 | 632 | 660 | 682 | 699 | 714 | 700 | 571 |
| **6** | 649 | 690 | 721 | 745 | 763 | 791 | 802 | 756 |
| **7** | 691 | 735 | 768 | 793 | 813 | 842 | 863 | 863 |
| **8** | 1061 | 1129 | 1179 | 1218 | 1249 | 1294 | 1327 | 1361 |
| **9** | 1179 | 1254 | 1310 | 1353 | 1387 | 1438 | 1474 | 1521 |
| **10** | 1297 | 1380 | 1441 | 1488 | 1526 | 1581 | 1621 | 1673 |

*Datos en azul corresponden a toma externa / Values in blue correspond to external impulse

d=0,83 $Kg/m^3$ AC 10

DUNGS®
Combustion Controls

**Tablas de caudal / Flow tables (Imperial units)**

| Ø10 | Pressures (Psig/"WC) vs Flow (SCFH) | | | | | | | |
|---|---|---|---|---|---|---|---|---|
| **Pin / Pout** | **15 Psig** | **18 Psig** | **22 Psig** | **25 Psig** | **29 Psig** | **36 Psig** | **44 Psig** | **58 Psig** |
| **3 Psig** | - | - | - | - | - | - | - | - |
| **4 Psig** | - | - | - | - | - | - | - | - |
| **6 Psig** | - | - | - | - | - | - | - | - |
| **7 Psig** | - | - | - | - | - | - | - | - |
| **11 Psig** | - | - | - | - | - | - | - | - |
| **15 Psig** | - | - | - | - | - | - | - | - |
| **22 Psig** | 3968 | 2975 | - | - | - | - | - | - |
| **29 Psig** | 5611 | 5152 | 4433 | 3287 | - | - | - | - |
| **44 Psig** | 7935 | 7870 | 7678 | 7350 | 6865 | 5241 | - | - |
| **58 Psig** | 9913 | 9913 | 9913 | 9861 | 9708 | 9078 | 7922 | - |
| **73 Psig** | 11890 | 11890 | 11890 | 11890 | 11890 | 11720 | 11204 | 8855 |
| **87 Psig** | 13868 | 13868 | 13868 | 13868 | 13868 | 13867 | 13722 | 12522 |
| **102 Psig** | 15845 | 15845 | 15845 | 15845 | 15845 | 15845 | 15845 | 15337 |
| **116 Psig** | 17822 | 17822 | 17822 | 17822 | 17822 | 17822 | 17822 | 17709 |
| **131 Psig** | 19800 | 19800 | 19800 | 19800 | 19800 | 19800 | 19800 | 19800 |
| **145 Psig** | 21777 | 21777 | 21777 | 21777 | 21777 | 21777 | 21777 | 21777 |

*Datos en azul corresponden a toma externa / Values in blue correspond to external impulse

d=0,05 lb/ft$^3$ AC 10

| Ø16 | Pressures (Psig/"WC) vs Flow (SCFH) | | | | | | | |
|---|---|---|---|---|---|---|---|---|
| **Pin / Pout** | **15 Psig** | **18 Psig** | **22 Psig** | **25 Psig** | **29 Psig** | **36 Psig** | **44 Psig** | **58 Psig** |
| **3 Psig** | - | - | - | - | - | - | - | - |
| **4 Psig** | - | - | - | - | - | - | - | - |
| **6 Psig** | - | - | - | - | - | - | - | - |
| **7 Psig** | - | - | - | - | - | - | - | - |
| **11 Psig** | - | - | - | - | - | - | - | - |
| **15 Psig** | - | - | - | - | - | - | - | - |
| **22 Psig** | 6518 | 5198 | - | - | - | - | - | - |
| **29 Psig** | 9217 | 9004 | 8091 | 6196 | - | - | - | - |
| **44 Psig** | 13035 | 13753 | 14014 | 13854 | 13266 | 10500 | - | - |
| **58 Psig** | 16283 | 17323 | 18092 | 18588 | 18761 | 18186 | 16267 | - |
| **73 Psig** | 19532 | 20778 | 21702 | 22413 | 22978 | 23478 | 23005 | 18768 |
| **87 Psig** | 22780 | 24234 | 25311 | 26140 | 26799 | 27780 | 28176 | 26542 |
| **102 Psig** | 26028 | 27689 | 28920 | 29868 | 30621 | 31741 | 32534 | 32507 |
| **116 Psig** | 29276 | 31145 | 32529 | 33595 | 34442 | 35702 | 36595 | 37536 |
| **131 Psig** | 32524 | 34600 | 36138 | 37323 | 38264 | 39663 | 40655 | 41966 |
| **145 Psig** | 35773 | 38056 | 39747 | 41050 | 42085 | 43625 | 44715 | 46157 |

*Datos en azul corresponden a toma externa / Values in blue correspond to external impulse

d=0,05 lb/ft$^3$ AC 10

DUNGS®
Combustion Controls

**Tablas de caudal / Flow tables (Imperial units)**

| Ø20 | Pressures (Psig/"WC) vs Flow (SCFH) | | | | | | | |
|---|---|---|---|---|---|---|---|---|
| **Pin / Pout** | **15 Psig** | **18 Psig** | **22 Psig** | **25 Psig** | **29 Psig** | **36 Psig** | **44 Psig** | **58 Psig** |
| **3 Psig** | - | - | - | - | - | - | - | - |
| **4 Psig** | - | - | - | - | - | - | - | - |
| **6 Psig** | - | - | - | - | - | - | - | - |
| **7 Psig** | - | - | - | - | - | - | - | - |
| **11 Psig** | - | - | - | - | - | - | - | - |
| **15 Psig** | - | - | - | - | - | - | - | - |
| **22 Psig** | 7495 | 5978 | - | - | - | - | - | - |
| **29 Psig** | 10534 | 10290 | 9247 | 7081 | - | - | - | - |
| **44 Psig** | 14711 | 15522 | 15816 | 15636 | 14972 | 11850 | - | - |
| **58 Psig** | 18144 | 19302 | 20160 | 20712 | 20906 | 20265 | 18126 | - |
| **73 Psig** | 21485 | 22856 | 23872 | 24654 | 25276 | 25826 | 25306 | 20645 |
| **87 Psig** | 24732 | 26311 | 27480 | 28381 | 29097 | 30161 | 30591 | 28817 |
| **102 Psig** | 27887 | 29667 | 30986 | 32001 | 32808 | 34008 | 34858 | 34829 |
| **116 Psig** | 30949 | 32924 | 34388 | 35515 | 36410 | 37742 | 38686 | 39681 |
| **131 Psig** | 33918 | 36083 | 37687 | 38922 | 39904 | 41363 | 42397 | 43765 |
| **145 Psig** | 36795 | 39143 | 40883 | 42223 | 43287 | 44871 | 45993 | 47476 |

*Datos en azul corresponden a toma externa / Values in blue correspond to external impulse

d=0,05 lb/ft$^3$ AC 10

| Ø25 | Pressures (Psig/"WC) vs Flow (SCFH) | | | | | | | |
|---|---|---|---|---|---|---|---|---|
| **Pin / Pout** | **15 Psig** | **18 Psig** | **22 Psig** | **25 Psig** | **29 Psig** | **36 Psig** | **44 Psig** | **58 Psig** |
| **3 Psig** | - | - | - | - | - | - | - | - |
| **4 Psig** | - | - | - | - | - | - | - | - |
| **6 Psig** | - | - | - | - | - | - | - | - |
| **7 Psig** | - | - | - | - | - | - | - | - |
| **11 Psig** | - | - | - | - | - | - | - | - |
| **15 Psig** | - | - | - | - | - | - | - | - |
| **22 Psig** | 8566 | 6832 | - | - | - | - | - | - |
| **29 Psig** | 11798 | 11525 | 10357 | 7931 | - | - | - | - |
| **44 Psig** | 15791 | 16661 | 16977 | 16784 | 16071 | 12720 | - | - |
| **58 Psig** | 18610 | 19797 | 20677 | 21243 | 21442 | 20784 | 18591 | - |
| **73 Psig** | 20982 | 22322 | 23314 | 24078 | 24685 | 25222 | 24714 | 20162 |
| **87 Psig** | 22910 | 24372 | 25455 | 26290 | 26953 | 27939 | 28337 | 26693 |
| **102 Psig** | 24392 | 25949 | 27102 | 27991 | 28696 | 29746 | 30489 | 30464 |
| **116 Psig** | 37474 | 39865 | 41637 | 43002 | 44086 | 45699 | 46841 | 48046 |
| **131 Psig** | 41631 | 44288 | 46257 | 47773 | 48977 | 50769 | 52038 | 53717 |
| **145 Psig** | 45789 | 48712 | 50876 | 52544 | 53869 | 55840 | 57235 | 59082 |

*Datos en azul corresponden a toma externa / Values in blue correspond to external impulse

d=0,05 lb/ft$^3$ AC 10

Plano CAD, no cambiar manualmente!
CAD-Drawing, do not change manually!

This design and/or document is proprietary and protected by copyright.
It may not, without our prior express consent, be copied nor transmitted
to any third party. It must be returned to us upon discharge of the order.

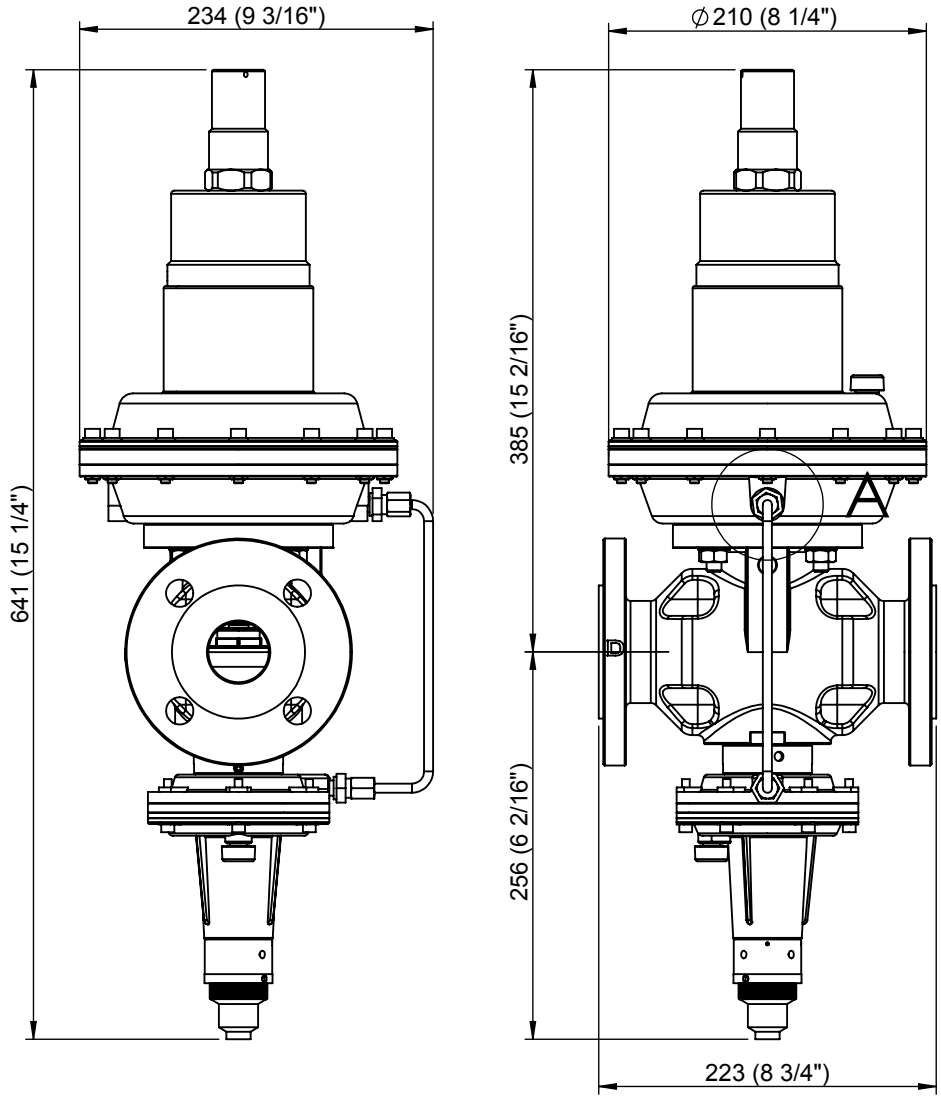


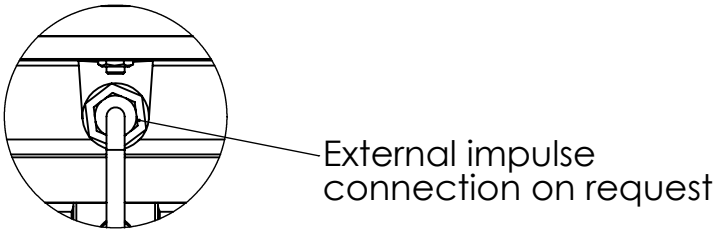


DETALLE A
ESCALA 2 : 5

3D

| Rev | Descripción Modificación | Fecha | Nom |
|---|---|---|---|
| | | | |
| | | | |
| | | | |
| | | | |
| | | | |
| | | | |
| | | | |
| | | | |
| | | | |
| | | | |
| | | | |
| | | | |

**Karl Dungs S.L.U.**
**Combustion Controls**
Avinguda de Can Roqueta, 15 - Pol. Can Roqueta
E-08202 - Sabadell
Barcelona - ESPAÑA

| | Fecha | Nombre | Firmado |
|---|---|---|---|
| Dibujado | 31/10/2018 | A. Rof | |
| Verificado | 31/10/2018 | J. Inglés | |
| Aprobado | 31/10/2018 | GX | |

Tolerancias según ISO 2768
TOLERANCIAS GENERALES ISO 2768-mK
(MEDIUM) TOLERANCIAS LINEALES
Roscas a 6g/6H y longitudes +1.0/-0

Rz 12.5 ( )

Eliminar rebabas y cantos vivos

Escala: 1:5

Material:

Acabado:

Tratamiento:

Peso: 20270.92 gr.

Descripción:
DIMENSIONS FRM-NOC100040UHD

| Código Pieza | Rev. | Formato | Pág. |
|---|---|---|---|
| FRM-NOC100040UHD | 0 | A4 | 1 de 1 |

Dimensiones en mm (inch)

Queda prohibida la preproducción total o parcial de este documento
y del contenido del mismo sin la autorización escrita de Karl Dungs S.L.U.
Todos los derechos reservados.

## ESPECIFICACIONES TÉCNICAS / TECHNICAL SPECIFICATION

DUNGS®
Combustion Controls

Regulador de presión con válvula de seguridad, conforme a las normas EN-334 y EN-14382 /
Pressure regulator with safety shut-off valve, in accordance with the standards EN-334 and EN-14382

| | |
|---|---|
| Presión de operación / Operating pressure | Max. 10 Bar / 1000 kPa / 145 Psig |
| Rango de presión de salida FRM / Outlet pressure range FRM | Ver tabla de Selección / See Set point Table |
| Temperatura máxima ambiental / Ambient maximum temperature | 60 ºC / 145ºF |
| Temperatura minima ambiental / Ambient minimum temperature | -20 ºC / -10 ºF |
| Fluido / Flow | Gas Natural, GLP / Natural Gas, LPG |
| Posición de montaje / Mounting Position | 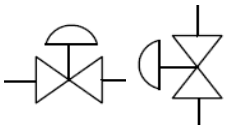 *Puede variar el tarado para presiones inferiores a 300 mbar / for pressures below 300 mbar setpoint can be altered |
| Tipo de Construcción / Construction Type: | DS (De resistencia diferencial) / DS (Diferential strenght) |
| Materiales / Materials — Cuerpo / Body | Hierro fundido / Cast iron EN GJS 500-7 or EN GJS 400-15 |
| Actuador / Actuator | Aluminio / Aluminium |
| Membranas / Membranes | NBR EN549 conform |
| Diametro Nominal / Nominal Diameter | Bridas de conexión PN 25 según EN1092-1 / Connecting flange PN 25 according to EN1092-1 DN 50 |

| Codigo de producto / Product's code | BSP / SAV | BSP | NPT / SAV | NPT |
|---|---|---|---|---|
| | 279081 | 279093 | 280256 | 280268 |

Producto diseñado acorde a las normas EN-334 y EN-14382 / Product designed in accordance to EN-334 and EN-14382
Categoría III (Regulador) y IV (Válvula de seguridad) acorde a PED 2014/68/UE & CRN B51.14 pendiente
Product category III (Regulator) and IV (Safety valve) according to PED 2014/68/UE & CRN B51.14 pending

| Muelle de regulación / Regulation spring | | | | | | | | | | | |
|---|---|---|---|---|---|---|---|---|---|---|---|
| Ø hilo / wire | Rango / Range (min-Max) | | | | | | | | | Color/Color | codigo/code |
| 3,5 | 20 | 25 | (mbar) | 2 | 2,5 | (kPa) | 10 | 10 | ("WC) | amarillo/yellow | 286379 |
| 4 | 25 | 45 | (mbar) | 2,5 | 4,5 | (kPa) | 10 | 20 | ("WC) | azul/blue | 286380 |
| 4,5 | 30 | 65 | (mbar) | 3 | 6,5 | (kPa) | 10 | 30 | ("WC) | negro/black | 286381 |
| 5 | 50 | 100 | (mbar) | 5 | 10 | (kPa) | 20 | 40 | ("WC) | blanco/white | 287682 |

| Muelle de mínima presión / Under pressure spring (UPSO) | | | | | | | | | | | |
|---|---|---|---|---|---|---|---|---|---|---|---|
| Ø hilo / wire | Rango / Range (min-Max) | | | | | | | | | Color/Color | codigo/code |
| 1,25 | 10 | 32 | (mbar) | 1 | 3,2 | (kPa) | 0 | 10 | ("WC) | Blanco/white | 270171 |
| 1,5 | 24 | 40 | (mbar) | 2,4 | 4 | (kPa) | 10 | 20 | ("WC) | Amarillo/yellow | 270175 |
| 2 | 30 | 115 | (mbar) | 3 | 11,5 | (kPa) | 10 | 50 | ("WC) | azul/blue | 270176 |

| Muelle de máxima presión / Over pressure spring (OPSO) | | | | | | | | | | | |
|---|---|---|---|---|---|---|---|---|---|---|---|
| Ø hilo / wire | Rango / Range (min-Max) | | | | | | | | | Color/Color | codigo/code |
| 2,25 | 40 | 130 | (mbar) | 4 | 13 | (kPa) | 20 | 1,9 | ("WC) | plata/silver | 270181 |
| 2,5 | 60 | 190 | (mbar) | 6 | 19 | (kPa) | 20 | 2,8 | ("WC) | verde/green | 270182 |
| 2,75 | 90 | 240 | (mbar) | 9 | 24 | (kPa) | 40 | 3,5 | ("WC) | rojo/red | 270183 |

| Orificios / Orifices | | | | | | |
|---|---|---|---|---|---|---|
| Medida/size | Ø12 | Ø16 | Ø20 | Ø25 | Ø30 | Ø35 |
| $P_{umax}$* (bar/psig) | 10 / 145 | 10 / 145 | 10 / 145 | 6 / 087 | 3 / 43,5 | 1 / 14,5 |

*Máxima presión de entrada / Maximum inlet pressure

Regulador de gas para media presión / Gas regulator for medium pressure
**FRM-NOC 100050 ND / SAV ND**

DUNGS®
Combustion Controls

**Tablas de caudal / Flow tables (SI units)**

| Ø12 | Pressures (Bar) vs Flow ($Nm^3/h$) | | | | | | | |
|---|---|---|---|---|---|---|---|---|
| **Pin / Pout** | **0,02** | **0,03** | **0,04** | **0,05** | **0,06** | **0,07** | **0,08** | **0,1** |
| **0,2** | 69 | 67 | 65 | 63 | 62 | 60 | 58 | 53 |
| **0,3** | 86 | 84 | 83 | 82 | 81 | 79 | 78 | 75 |
| **0,4** | 100 | 99 | 98 | 97 | 96 | 95 | 94 | 92 |
| **0,5** | 112 | 111 | 111 | 110 | 109 | 109 | 108 | 106 |
| **0,75** | 138 | 138 | 137 | 137 | 137 | 136 | 136 | 135 |
| **1** | 160 | 160 | 160 | 160 | 160 | 160 | 159 | 159 |
| **1,5** | 200 | 200 | 200 | 200 | 200 | 200 | 200 | 200 |
| **2** | 240 | 240 | 240 | 240 | 240 | 240 | 240 | 240 |
| **3** | 319 | 319 | 319 | 319 | 319 | 319 | 319 | 319 |
| **4** | 399 | 399 | 399 | 399 | 399 | 399 | 399 | 399 |
| **5** | 478 | 478 | 478 | 478 | 478 | 478 | 478 | 478 |
| **6** | 558 | 558 | 558 | 558 | 558 | 558 | 558 | 558 |
| **7** | 637 | 637 | 637 | 637 | 637 | 637 | 637 | 637 |
| **8** | 717 | 717 | 717 | 717 | 717 | 717 | 717 | 717 |
| **9** | 796 | 796 | 796 | 796 | 796 | 796 | 796 | 796 |
| **10** | 876 | 876 | 876 | 876 | 876 | 876 | 876 | 876 |

*Datos en azul corresponden a toma externa / Values in blue correspond to external impulse

d=0,83 $Kg/m^3$ AC 10

| Ø16 | Pressures (Bar) vs Flow ($Nm^3/h$) | | | | | | | |
|---|---|---|---|---|---|---|---|---|
| **Pin / Pout** | **0,02** | **0,03** | **0,04** | **0,05** | **0,06** | **0,07** | **0,08** | **0,1** |
| **0,2** | 123 | 120 | 117 | 114 | 110 | 107 | 103 | 95 |
| **0,3** | 152 | 150 | 148 | 146 | 144 | 141 | 139 | 134 |
| **0,4** | 177 | 175 | 174 | 172 | 170 | 169 | 167 | 163 |
| **0,5** | 198 | 196 | 195 | 194 | 193 | 191 | 190 | 187 |
| **0,75** | 240 | 240 | 239 | 239 | 238 | 237 | 237 | 235 |
| **1** | 275 | 275 | 274 | 274 | 274 | 274 | 274 | 273 |
| **1,5** | 334 | 334 | 334 | 334 | 334 | 334 | 334 | 334 |
| **2** | 389 | 389 | 389 | 389 | 389 | 389 | 389 | 389 |
| **3** | 488 | 488 | 488 | 488 | 488 | 488 | 488 | 488 |
| **4** | 727 | 727 | 727 | 727 | 727 | 727 | 727 | 727 |
| **5** | 872 | 872 | 872 | 872 | 872 | 872 | 872 | 872 |
| **6** | 1017 | 1017 | 1017 | 1017 | 1017 | 1017 | 1017 | 1017 |
| **7** | 1162 | 1162 | 1162 | 1162 | 1162 | 1162 | 1162 | 1162 |
| **8** | 1307 | 1307 | 1307 | 1307 | 1307 | 1307 | 1307 | 1307 |
| **9** | 1452 | 1452 | 1452 | 1452 | 1452 | 1452 | 1452 | 1452 |
| **10** | 0 | 0 | 1597 | 1597 | 1597 | 1597 | 1597 | 1597 |

*Datos en azul corresponden a toma externa / Values in blue correspond to external impulse

d=0,83 $Kg/m^3$ AC 10

DUNGS®
Combustion Controls

**Tablas de caudal / Flow tables (SI units)**

| Ø20 | Pressures (Bar) vs Flow ($Nm^3/h$) | | | | | | | |
|---|---|---|---|---|---|---|---|---|
| **Pin / Pout** | **0,02** | **0,03** | **0,04** | **0,05** | **0,06** | **0,07** | **0,08** | **0,1** |
| **0,2** | 170 | 166 | 162 | 157 | 153 | 148 | 143 | 131 |
| **0,3** | 210 | 208 | 205 | 202 | 199 | 195 | 192 | 185 |
| **0,4** | 244 | 242 | 240 | 237 | 235 | 233 | 230 | 225 |
| **0,5** | 273 | 271 | 269 | 268 | 266 | 264 | 262 | 258 |
| **0,75** | 331 | 331 | 330 | 329 | 328 | 327 | 326 | 324 |
| **1** | 378 | 378 | 378 | 378 | 378 | 377 | 377 | 376 |
| **1,5** | 459 | 459 | 459 | 459 | 459 | 459 | 459 | 459 |
| **2** | 533 | 533 | 533 | 533 | 533 | 533 | 533 | 533 |
| **3** | 666 | 666 | 666 | 666 | 666 | 666 | 666 | 666 |
| **4** | 1066 | 1066 | 1066 | 1066 | 1066 | 1066 | 1066 | 1066 |
| **5** | 1278 | 1278 | 1278 | 1278 | 1278 | 1278 | 1278 | 1278 |
| **6** | 1491 | 1491 | 1491 | 1491 | 1491 | 1491 | 1491 | 1491 |
| **7** | 0 | 0 | 1704 | 1704 | 1704 | 1704 | 1704 | 1704 |
| **8** | 0 | 0 | 0 | 1916 | 1916 | 1916 | 1916 | 1916 |
| **9** | 0 | 0 | 0 | 0 | 2129 | 2129 | 2129 | 2129 |
| **10** | 0 | 0 | 0 | 0 | 0 | 2341 | 2341 | 2341 |

*Datos en azul corresponden a toma externa / Values in blue correspond to external impulse

d=0,83 $Kg/m^3$ AC 10

| Ø25 | Pressures (Bar) vs Flow ($Nm^3/h$) | | | | | | | |
|---|---|---|---|---|---|---|---|---|
| **Pin / Pout** | **0,02** | **0,03** | **0,04** | **0,05** | **0,06** | **0,07** | **0,08** | **0,1** |
| **0,2** | 163 | 166 | 162 | 157 | 153 | 148 | 143 | 131 |
| **0,3** | 203 | 208 | 205 | 202 | 199 | 195 | 192 | 185 |
| **0,4** | 235 | 242 | 240 | 237 | 235 | 233 | 230 | 225 |
| **0,5** | 262 | 271 | 269 | 267 | 266 | 264 | 262 | 258 |
| **0,75** | 318 | 330 | 329 | 328 | 327 | 326 | 325 | 323 |
| **1** | 362 | 376 | 376 | 376 | 376 | 375 | 375 | 374 |
| **1,5** | 437 | 454 | 454 | 454 | 454 | 454 | 454 | 454 |
| **2** | 506 | 526 | 526 | 526 | 526 | 526 | 526 | 526 |
| **3** | 626 | 650 | 650 | 650 | 650 | 650 | 650 | 650 |
| **4** | 0 | 749 | 749 | 749 | 749 | 749 | 749 | 749 |
| **5** | 0 | 0 | 1787 | 1787 | 1787 | 1787 | 1787 | 1787 |
| **6** | 0 | 0 | 0 | 2084 | 2084 | 2084 | 2084 | 2084 |
| **7** | 0 | 0 | 0 | 0 | 0 | 0 | 0 | 0 |
| **8** | 0 | 0 | 0 | 0 | 0 | 0 | 0 | 0 |
| **9** | 0 | 0 | 0 | 0 | 0 | 0 | 0 | 0 |
| **10** | 0 | 0 | 0 | 0 | 0 | 0 | 0 | 0 |

*Datos en azul corresponden a toma externa / Values in blue correspond to external impulse

d=0,83 $Kg/m^3$ AC 10

DUNGS®
Combustion Controls

**Tablas de caudal / Flow tables (SI units)**

| Ø30 | Pressures (Bar) vs Flow ($Nm^3/h$) | | | | | | | |
|---|---|---|---|---|---|---|---|---|
| **Pin / Pout** | **0,02** | **0,03** | **0,04** | **0,05** | **0,06** | **0,07** | **0,08** | **0,1** |
| **0,2** | 185 | 188 | 187 | 184 | 180 | 175 | 170 | 158 |
| **0,3** | 229 | 235 | 236 | 236 | 234 | 231 | 228 | 221 |
| **0,4** | 264 | 272 | 276 | 276 | 276 | 275 | 273 | 268 |
| **0,5** | 294 | 304 | 309 | 311 | 311 | 311 | 310 | 307 |
| **0,75** | 355 | 369 | 375 | 379 | 381 | 383 | 383 | 383 |
| **1** | 403 | 419 | 427 | 432 | 435 | 438 | 439 | 441 |
| **1,5** | 0 | 800 | 816 | 826 | 833 | 838 | 842 | 847 |
| **2** | 0 | 0 | 978 | 990 | 999 | 1005 | 1009 | 1015 |
| **3** | 0 | 0 | 0 | 1319 | 1330 | 1338 | 1344 | 1352 |
| **4** | 0 | 0 | 0 | 0 | 0 | 0 | 0 | 0 |
| **5** | 0 | 0 | 0 | 0 | 0 | 0 | 0 | 0 |
| **6** | 0 | 0 | 0 | 0 | 0 | 0 | 0 | 0 |
| **7** | 0 | 0 | 0 | 0 | 0 | 0 | 0 | 0 |
| **8** | 0 | 0 | 0 | 0 | 0 | 0 | 0 | 0 |
| **9** | 0 | 0 | 0 | 0 | 0 | 0 | 0 | 0 |
| **10** | 0 | 0 | 0 | 0 | 0 | 0 | 0 | 0 |

*Datos en azul corresponden a toma externa / Values in blue correspond to external impulse

d=0,83 $Kg/m^3$ AC 10

| Ø35 | Pressures (Bar) vs Flow ($Nm^3/h$) | | | | | | | |
|---|---|---|---|---|---|---|---|---|
| **Pin / Pout** | **0,02** | **0,03** | **0,04** | **0,05** | **0,06** | **0,07** | **0,08** | **0,1** |
| **0,2** | 160 | 163 | 162 | 159 | 156 | 152 | 147 | 137 |
| **0,3** | 199 | 204 | 205 | 204 | 203 | 201 | 198 | 192 |
| **0,4** | 230 | 237 | 239 | 240 | 240 | 239 | 237 | 233 |
| **0,5** | 256 | 265 | 268 | 270 | 271 | 270 | 270 | 267 |
| **0,75** | 310 | 321 | 327 | 331 | 332 | 334 | 334 | 334 |
| **1** | 352 | 366 | 373 | 378 | 381 | 383 | 384 | 386 |
| **1,5** | 0 | 0 | 0 | 0 | 0 | 460 | 462 | 465 |
| **2** | 0 | 0 | 0 | 0 | 0 | 0 | 531 | 535 |
| **3** | 0 | 0 | 0 | 0 | 0 | 0 | 0 | 0 |
| **4** | 0 | 0 | 0 | 0 | 0 | 0 | 0 | 0 |
| **5** | 0 | 0 | 0 | 0 | 0 | 0 | 0 | 0 |
| **6** | 0 | 0 | 0 | 0 | 0 | 0 | 0 | 0 |
| **7** | 0 | 0 | 0 | 0 | 0 | 0 | 0 | 0 |
| **8** | 0 | 0 | 0 | 0 | 0 | 0 | 0 | 0 |
| **9** | 0 | 0 | 0 | 0 | 0 | 0 | 0 | 0 |
| **10** | 0 | 0 | 0 | 0 | 0 | 0 | 0 | 0 |

*Datos en azul corresponden a toma externa / Values in blue correspond to external impulse

d=0,83 $Kg/m^3$ AC 10

DUNGS®
Combustion Controls

**Tablas de caudal / Flow tables (Imperial units)**

| Ø12 | Pressures (Psig/"WC) vs Flow (SCFH) | | | | | | | |
|---|---|---|---|---|---|---|---|---|
| **Pin / Pout** | **8 "WC** | **12 "WC** | **16 "WC** | **20 "WC** | **24 "WC** | **28 "WC** | **32 "WC** | **40 "WC** |
| **3 Psig** | 2421 | 2364 | 2305 | 2242 | 2176 | 2107 | 2033 | 1873 |
| **4 Psig** | 3019 | 2979 | 2938 | 2894 | 2849 | 2802 | 2753 | 2649 |
| **6 Psig** | 3518 | 3488 | 3457 | 3425 | 3391 | 3356 | 3320 | 3244 |
| **7 Psig** | 3953 | 3931 | 3907 | 3883 | 3858 | 3831 | 3804 | 3746 |
| **11 Psig** | 4875 | 4865 | 4855 | 4843 | 4831 | 4818 | 4805 | 4775 |
| **15 Psig** | 5649 | 5647 | 5645 | 5642 | 5639 | 5635 | 5630 | 5619 |
| **22 Psig** | 7055 | 7055 | 7055 | 7055 | 7055 | 7055 | 7055 | 7055 |
| **29 Psig** | 8458 | 8458 | 8458 | 8458 | 8458 | 8458 | 8458 | 8458 |
| **44 Psig** | 11265 | 11265 | 11265 | 11265 | 11265 | 11265 | 11265 | 11265 |
| **58 Psig** | 14073 | 14073 | 14073 | 14073 | 14073 | 14073 | 14073 | 14073 |
| **73 Psig** | 16880 | 16880 | 16880 | 16880 | 16880 | 16880 | 16880 | 16880 |
| **87 Psig** | 19687 | 19687 | 19687 | 19687 | 19687 | 19687 | 19687 | 19687 |
| **102 Psig** | 22494 | 22494 | 22494 | 22494 | 22494 | 22494 | 22494 | 22494 |
| **116 Psig** | 25301 | 25301 | 25301 | 25301 | 25301 | 25301 | 25301 | 25301 |
| **131 Psig** | 28109 | 28109 | 28109 | 28109 | 28109 | 28109 | 28109 | 28109 |
| **145 Psig** | 30916 | 30916 | 30916 | 30916 | 30916 | 30916 | 30916 | 30916 |

*Datos en azul corresponden a toma externa / Values in blue correspond to external impulse

d=0,05 lb/ft$^3$ AC 10

| Ø16 | Pressures (Psig/"WC) vs Flow (SCFH) | | | | | | | |
|---|---|---|---|---|---|---|---|---|
| **Pin / Pout** | **8 "WC** | **12 "WC** | **16 "WC** | **20 "WC** | **24 "WC** | **28 "WC** | **32 "WC** | **40 "WC** |
| **3 Psig** | 4339 | 4238 | 4131 | 4018 | 3900 | 3776 | 3645 | 3357 |
| **4 Psig** | 5384 | 5312 | 5238 | 5161 | 5080 | 4996 | 4909 | 4723 |
| **6 Psig** | 6239 | 6186 | 6131 | 6074 | 6014 | 5953 | 5889 | 5754 |
| **7 Psig** | 6974 | 6935 | 6893 | 6850 | 6806 | 6759 | 6711 | 6609 |
| **11 Psig** | 8486 | 8468 | 8450 | 8430 | 8409 | 8386 | 8363 | 8312 |
| **15 Psig** | 9699 | 9696 | 9692 | 9687 | 9681 | 9674 | 9667 | 9648 |
| **22 Psig** | 11780 | 11780 | 11780 | 11780 | 11780 | 11780 | 11780 | 11780 |
| **29 Psig** | 13724 | 13724 | 13724 | 13724 | 13724 | 13724 | 13724 | 13724 |
| **44 Psig** | 17217 | 17217 | 17217 | 17217 | 17217 | 17217 | 17217 | 17217 |
| **58 Psig** | 25669 | 25669 | 25669 | 25669 | 25669 | 25669 | 25669 | 25669 |
| **73 Psig** | 30789 | 30789 | 30789 | 30789 | 30789 | 30789 | 30789 | 30789 |
| **87 Psig** | 35910 | 35910 | 35910 | 35910 | 35910 | 35910 | 35910 | 35910 |
| **102 Psig** | 41030 | 41030 | 41030 | 41030 | 41030 | 41030 | 41030 | 41030 |
| **116 Psig** | 46150 | 46150 | 46150 | 46150 | 46150 | 46150 | 46150 | 46150 |
| **131 Psig** | 51271 | 51271 | 51271 | 51271 | 51271 | 51271 | 51271 | 51271 |
| **145 Psig** | 0 | 0 | 56391 | 56391 | 56391 | 56391 | 56391 | 56391 |

*Datos en azul corresponden a toma externa / Values in blue correspond to external impulse

d=0,05 lb/ft$^3$ AC 10

DUNGS®
Combustion Controls

**Tablas de caudal / Flow tables (Imperial units)**

| Ø20 | Pressures (Psig/"WC) vs Flow (SCFH) | | | | | | | |
|---|---|---|---|---|---|---|---|---|
| **Pin / Pout** | **8 "WC** | **12 "WC** | **16 "WC** | **20 "WC** | **24 "WC** | **28 "WC** | **32 "WC** | **40 "WC** |
| **3 Psig** | 5993 | 5852 | 5705 | 5550 | 5387 | 5215 | 5033 | 4637 |
| **4 Psig** | 7433 | 7334 | 7231 | 7125 | 7013 | 6898 | 6777 | 6521 |
| **6 Psig** | 8610 | 8537 | 8461 | 8383 | 8301 | 8216 | 8128 | 7941 |
| **7 Psig** | 9623 | 9568 | 9511 | 9451 | 9390 | 9325 | 9259 | 9118 |
| **11 Psig** | 11698 | 11674 | 11648 | 11620 | 11591 | 11560 | 11528 | 11458 |
| **15 Psig** | 13359 | 13354 | 13349 | 13342 | 13334 | 13324 | 13314 | 13288 |
| **22 Psig** | 16194 | 16194 | 16194 | 16194 | 16194 | 16194 | 16194 | 16194 |
| **29 Psig** | 18831 | 18831 | 18831 | 18831 | 18831 | 18831 | 18831 | 18831 |
| **44 Psig** | 23523 | 23523 | 23523 | 23523 | 23523 | 23523 | 23523 | 23523 |
| **58 Psig** | 37635 | 37635 | 37635 | 37635 | 37635 | 37635 | 37635 | 37635 |
| **73 Psig** | 45142 | 45142 | 45142 | 45142 | 45142 | 45142 | 45142 | 45142 |
| **87 Psig** | 52650 | 52650 | 52650 | 52650 | 52650 | 52650 | 52650 | 52650 |
| **102 Psig** | 0 | 0 | 60157 | 60157 | 60157 | 60157 | 60157 | 60157 |
| **116 Psig** | 0 | 0 | 0 | 67665 | 67665 | 67665 | 67665 | 67665 |
| **131 Psig** | 0 | 0 | 0 | 0 | 75172 | 75172 | 75172 | 75172 |
| **145 Psig** | 0 | 0 | 0 | 0 | 0 | 82680 | 82680 | 82680 |

*Datos en azul corresponden a toma externa / Values in blue correspond to external impulse

d=0,05 lb/ft$^3$ AC 10

| Ø25 | Pressures (Psig/"WC) vs Flow (SCFH) | | | | | | | |
|---|---|---|---|---|---|---|---|---|
| **Pin / Pout** | **8 "WC** | **12 "WC** | **16 "WC** | **20 "WC** | **24 "WC** | **28 "WC** | **32 "WC** | **40 "WC** |
| **3 Psig** | 5773 | 5858 | 5711 | 5555 | 5392 | 5220 | 5039 | 4641 |
| **4 Psig** | 7154 | 7336 | 7233 | 7126 | 7015 | 6899 | 6779 | 6522 |
| **6 Psig** | 8281 | 8533 | 8457 | 8378 | 8297 | 8212 | 8123 | 7937 |
| **7 Psig** | 9247 | 9555 | 9498 | 9439 | 9377 | 9313 | 9247 | 9106 |
| **11 Psig** | 11220 | 11635 | 11610 | 11582 | 11553 | 11522 | 11490 | 11420 |
| **15 Psig** | 12786 | 13283 | 13278 | 13271 | 13263 | 13254 | 13243 | 13217 |
| **22 Psig** | 15434 | 16039 | 16039 | 16039 | 16039 | 16039 | 16039 | 16039 |
| **29 Psig** | 17864 | 18565 | 18565 | 18565 | 18565 | 18565 | 18565 | 18565 |
| **44 Psig** | 22089 | 22956 | 22956 | 22956 | 22956 | 22956 | 22956 | 22956 |
| **58 Psig** | 0 | 26463 | 26463 | 26463 | 26463 | 26463 | 26463 | 26463 |
| **73 Psig** | 0 | 0 | 63084 | 63084 | 63084 | 63084 | 63084 | 63084 |
| **87 Psig** | 0 | 0 | 0 | 73575 | 73575 | 73575 | 73575 | 73575 |
| **102 Psig** | 0 | 0 | 0 | 0 | 0 | 0 | 0 | 0 |
| **116 Psig** | 0 | 0 | 0 | 0 | 0 | 0 | 0 | 0 |
| **131 Psig** | 0 | 0 | 0 | 0 | 0 | 0 | 0 | 0 |
| **145 Psig** | 0 | 0 | 0 | 0 | 0 | 0 | 0 | 0 |

*Datos en azul corresponden a toma externa / Values in blue correspond to external impulse

d=0,05 lb/ft$^3$ AC 10

DUNGS®
Combustion Controls

**Tablas de caudal / Flow tables (Imperial units)**

| Ø30 | Pressures (Psig/"WC) vs Flow (SCFH) | | | | | | | |
|---|---|---|---|---|---|---|---|---|
| **Pin / Pout** | **8 "WC** | **12 "WC** | **16 "WC** | **20 "WC** | **24 "WC** | **28 "WC** | **32 "WC** | **40 "WC** |
| **3 Psig** | 6532 | 6633 | 6597 | 6497 | 6359 | 6193 | 6004 | 5566 |
| **4 Psig** | 8078 | 8289 | 8339 | 8318 | 8256 | 8168 | 8061 | 7805 |
| **6 Psig** | 9331 | 9621 | 9730 | 9758 | 9743 | 9701 | 9640 | 9478 |
| **7 Psig** | 10398 | 10751 | 10904 | 10970 | 10989 | 10979 | 10949 | 10851 |
| **11 Psig** | 12546 | 13019 | 13255 | 13387 | 13464 | 13508 | 13531 | 13534 |
| **15 Psig** | 14216 | 14778 | 15073 | 15251 | 15369 | 15449 | 15506 | 15574 |
| **22 Psig** | 0 | 28237 | 28811 | 29167 | 29409 | 29585 | 29718 | 29906 |
| **29 Psig** | 0 | 0 | 34543 | 34970 | 35261 | 35471 | 35631 | 35856 |
| **44 Psig** | 0 | 0 | 0 | 46577 | 46964 | 47244 | 47456 | 47757 |
| **58 Psig** | 0 | 0 | 0 | 0 | 0 | 0 | 0 | 0 |
| **73 Psig** | 0 | 0 | 0 | 0 | 0 | 0 | 0 | 0 |
| **87 Psig** | 0 | 0 | 0 | 0 | 0 | 0 | 0 | 0 |
| **102 Psig** | 0 | 0 | 0 | 0 | 0 | 0 | 0 | 0 |
| **116 Psig** | 0 | 0 | 0 | 0 | 0 | 0 | 0 | 0 |
| **131 Psig** | 0 | 0 | 0 | 0 | 0 | 0 | 0 | 0 |
| **145 Psig** | 0 | 0 | 0 | 0 | 0 | 0 | 0 | 0 |

*Datos en azul corresponden a toma externa / Values in blue correspond to external impulse

d=0,05 lb/ft$^3$ AC 10

| Ø35 | Pressures (Psig/"WC) vs Flow (SCFH) | | | | | | | |
|---|---|---|---|---|---|---|---|---|
| **Pin / Pout** | **8 "WC** | **12 "WC** | **16 "WC** | **20 "WC** | **24 "WC** | **28 "WC** | **32 "WC** | **40 "WC** |
| **3 Psig** | 5662 | 5749 | 5718 | 5632 | 5512 | 5368 | 5204 | 4824 |
| **4 Psig** | 7009 | 7192 | 7236 | 7217 | 7163 | 7087 | 6994 | 6772 |
| **6 Psig** | 8105 | 8356 | 8451 | 8475 | 8462 | 8426 | 8373 | 8233 |
| **7 Psig** | 9041 | 9348 | 9481 | 9538 | 9554 | 9546 | 9520 | 9435 |
| **11 Psig** | 10938 | 11351 | 11556 | 11671 | 11739 | 11777 | 11797 | 11800 |
| **15 Psig** | 12429 | 12921 | 13178 | 13334 | 13437 | 13508 | 13557 | 13617 |
| **22 Psig** | 0 | 0 | 0 | 0 | 0 | 16247 | 16320 | 16424 |
| **29 Psig** | 0 | 0 | 0 | 0 | 0 | 0 | 18767 | 18886 |
| **44 Psig** | 0 | 0 | 0 | 0 | 0 | 0 | 0 | 0 |
| **58 Psig** | 0 | 0 | 0 | 0 | 0 | 0 | 0 | 0 |
| **73 Psig** | 0 | 0 | 0 | 0 | 0 | 0 | 0 | 0 |
| **87 Psig** | 0 | 0 | 0 | 0 | 0 | 0 | 0 | 0 |
| **102 Psig** | 0 | 0 | 0 | 0 | 0 | 0 | 0 | 0 |
| **116 Psig** | 0 | 0 | 0 | 0 | 0 | 0 | 0 | 0 |
| **131 Psig** | 0 | 0 | 0 | 0 | 0 | 0 | 0 | 0 |
| **145 Psig** | 0 | 0 | 0 | 0 | 0 | 0 | 0 | 0 |

*Datos en azul corresponden a toma externa / Values in blue correspond to external impulse

d=0,05 lb/ft$^3$ AC 10

Plano CAD, no cambiar manualmente!
CAD-Drawing, do not change manually!

This design and/or document is proprietary and protected by copyright.
It may not, without our prior express consent, be copied nor transmitted
to any third party. It must be returned to us upon discharge of the order.

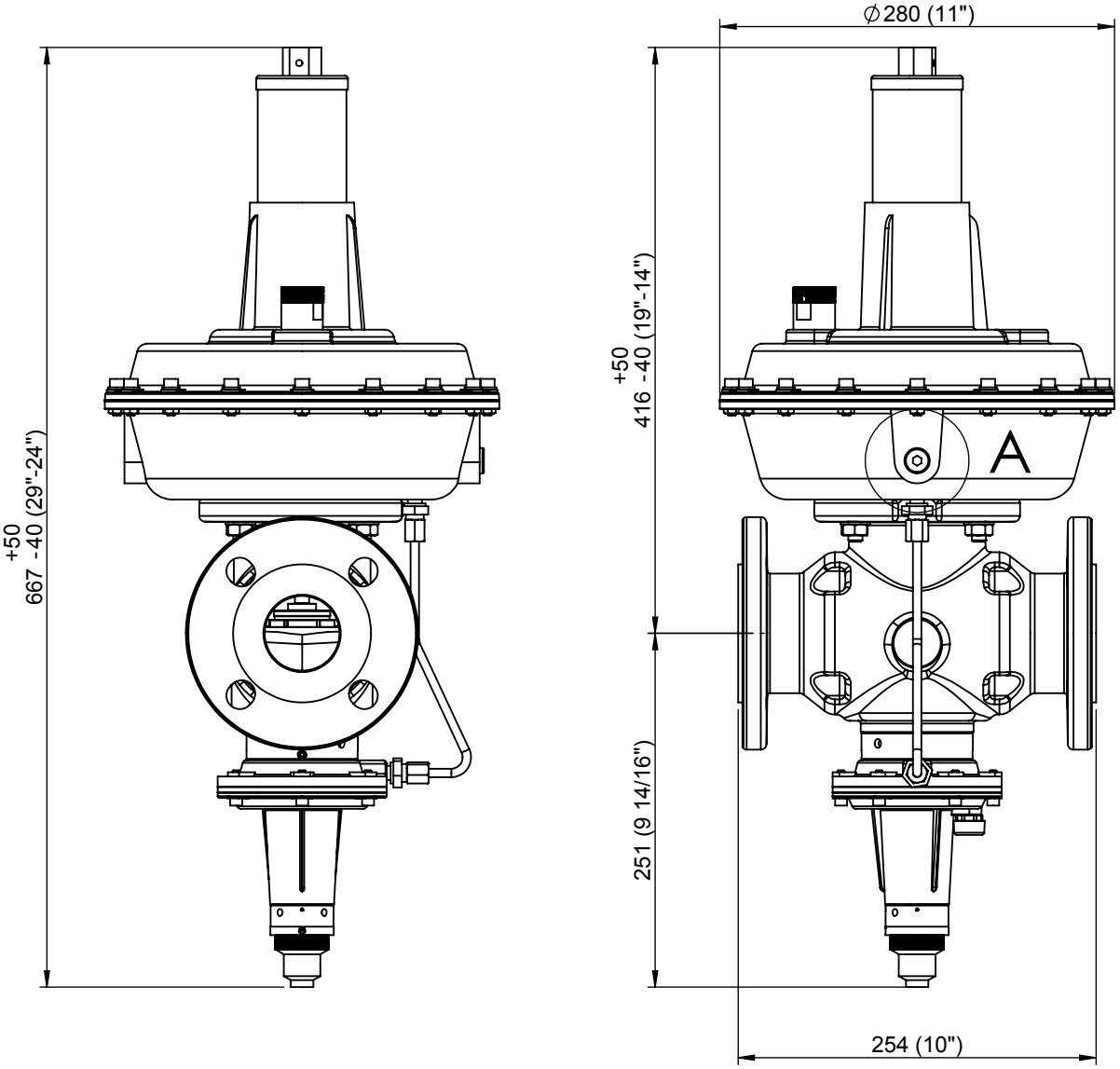


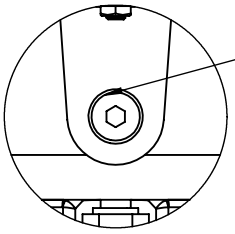


DETALLE A
ESCALA 2 : 5

3D

| Rev | Descripción Modificación | Fecha | Nom |
|---|---|---|---|
| | | | |
| | | | |
| | | | |
| | | | |
| | | | |
| | | | |
| | | | |
| | | | |
| | | | |
| | | | |
| | | | |
| | | | |

**Karl Dungs S.L.U.**
**Combustion Controls**
Avinguda de Can Roqueta, 15 - Pol. Can Roqueta
E-08202 - Sabadell
Barcelona - ESPAÑA

| | Fecha | Nombre | Firmado |
|---|---|---|---|
| Dibujado | 31/10/2018 | A.Rof | |
| Verificado | 31/10/2018 | J.Inglés | |
| Aprobado | 31/10/2018 | GX | |

Tolerancias según ISO 2768
TOLERANCIAS GENERALES ISO 2768-mK
(MEDIUM) TOLERANCIAS LINEALES
Roscas a 6g/6H y longitudes +1.0/-0

Rz 12.5 ( )

Eliminar rebabas y cantos vivos

Escala: 1:5

Material:

Acabado:

Tratamiento:

Peso: 22210.69 gr.

Descripción:
DIMENSIONS FRM-NOC100050ND/MD

| Código Pieza | Rev. | Formato | Pág. |
|---|---|---|---|
| FRM-NOC100050ND_MD | 0 | A4 | 1 de 1 |

Dimensiones en mm (inch)

Queda prohibida la preproducción total o parcial de este documento
y del contenido del mismo sin la autorización escrita de Karl Dungs S.L.U.
Todos los derechos reservados.

## ESPECIFICACIONES TÉCNICAS / TECHNICAL SPECIFICATION

DUNGS®
Combustion Controls

Regulador de presión con válvula de seguridad, conforme a las normas EN-334 y EN-14382 /
Pressure regulator with safety shut-off valve, in accordance with the standards EN-334 and EN-14382

| | |
|---|---|
| Presión de operación / Operating pressure | Max. 10 Bar / 1000 kPa / 145 Psig |
| Rango de presión de salida FRM / Outlet pressure range FRM | Ver tabla de Selección / See Set point Table |
| Temperatura máxima ambiental / Ambient maximum temperature | 60 ºC / 145ºF |
| Temperatura minima ambiental / Ambient minimum temperature | -20 ºC / -10 ºF |
| Fluido / Flow | Gas Natural, GLP / Natural Gas, LPG |
| Posición de montaje / Mounting Position | 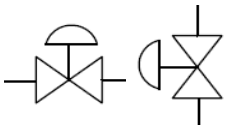 *Puede variar el tarado para presiones inferiores a 300 mbar / for pressures below 300 mbar setpoint can be altered |
| Tipo de Construcción / Construction Type: | DS (De resistencia diferencial) / DS (Diferential strenght) |
| Materiales / Materials — Cuerpo / Body | Hierro fundido / Cast iron EN GJS 500-7 or EN GJS 400-15 |
| Actuador / Actuator | Aluminio / Aluminium |
| Membranas / Membranes | NBR EN549 conform |
| Diametro Nominal / Nominal Diameter | Bridas de conexión PN 25 según EN1092-1 / Connecting flange PN 25 according to EN1092-1 DN 50 |

| Codigo de producto / Product's code | BSP / SAV | BSP | NPT / SAV | NPT |
|---|---|---|---|---|
| | 279082 | 279094 | 280257 | 280269 |

Producto diseñado acorde a las normas EN-334 y EN-14382 / Product designed in accordance to EN-334 and EN-14382
Categoría III (Regulador) y IV (Válvula de seguridad) acorde a PED 2014/68/UE & CRN B51.14 pendiente
Product category III (Regulator) and IV (Safety valve) according to PED 2014/68/UE & CRN B51.14 pending

| Muelle de regulación / Regulation spring | | | | | | | | | | | |
|---|---|---|---|---|---|---|---|---|---|---|---|
| Ø hilo / wire | Rango / Range (min-Max) | | | | | | | | | Color/Color | codigo/code |
| 5,5 | 80 | 150 | (mbar) | 8 | 15 | (kPa) | 30 | 2,2 | ("WC) | rosa/pink | 287288 |
| 6 | 130 | 250 | (mbar) | 13 | 25 | (kPa) | 1,9 | 3,6 | (psig) | verde/green | 287289 |
| 7 | 200 | 350 | (mbar) | 20 | 35 | (kPa) | 2,9 | 5,1 | (psig) | azul/blue | 287290 |
| 8 | 300 | 400 | (mbar) | 30 | 40 | (kPa) | 4,4 | 5,8 | (psig) | negro/black | 287291 |

| Muelle de mínima presión / Under pressure spring (UPSO) | | | | | | | | | | | |
|---|---|---|---|---|---|---|---|---|---|---|---|
| Ø hilo / wire | Rango / Range (min-Max) | | | | | | | | | Color/Color | codigo/code |
| 2 | 35 | 110 | (mbar) | 3,5 | 11 | (kPa) | 10 | 40 | ("WC) | azul/blue | 270176 |
| 2,3 | 50 | 250 | (mbar) | 5 | 25 | (kPa) | 20 | 3,6 | ("WC) | negro/black | 270177 |
| 2,5 | 80 | 400 | (mbar) | 8 | 40 | (kPa) | 30 | 5,8 | ("WC) | lila/purple | 270178 |

| Muelle de máxima presión / Over pressure spring (OPSO) | | | | | | | | | | | |
|---|---|---|---|---|---|---|---|---|---|---|---|
| Ø hilo / wire | Rango / Range (min-Max) | | | | | | | | | Color/Color | codigo/code |
| 2,5 | 180 | 290 | (mbar) | 18 | 29 | (kPa) | 2,6 | 4,2 | (psig) | verde/green | 270182 |
| 2,75 | 230 | 370 | (mbar) | 23 | 37 | (kPa) | 3,3 | 5,4 | (psig) | rojo/red | 270183 |
| 3,25 | 300 | 500 | (mbar) | 30 | 50 | (kPa) | 4,4 | 7,3 | (psig) | amarillo/yellow | 270184 |
| 3,5 | 400 | 800 | (mbar) | 40 | 80 | (kPa) | 5,8 | 11,6 | (psig) | azul/blue | 270185 |

| Orificios / Orifices | | | | | | |
|---|---|---|---|---|---|---|
| Medida/size | Ø10 | Ø16 | Ø20 | Ø25 | Ø30 | Ø35 |
| $P_{umax}$* (bar/psig) | 10 / 145 | 10 / 145 | 10 / 145 | 8 / 116 | 8 / 116 | 6 / 087 |

*Máxima presión de entrada / Maximum inlet pressure

Regulador de gas para media presión / Gas regulator for medium pressure

**FRM-NOC 100050 MD / SAV MD**

DUNGS®
Combustion Controls

**Tablas de caudal / Flow tables (SI units)**

| Ø12 | Pressures (Bar) vs Flow ($Nm^3/h$) | | | | | | | |
|---|---|---|---|---|---|---|---|---|
| **Pin / Pout** | **0,08** | **0,1** | **0,15** | **0,2** | **0,25** | **0,3** | **0,35** | **0,4** |
| **0,2** | 54 | 50 | 36 | - | - | - | - | - |
| **0,3** | 73 | 70 | 62 | 52 | 37 | - | - | - |
| **0,4** | 88 | 86 | 80 | 73 | 65 | 54 | 39 | - |
| **0,5** | 101 | 99 | 95 | 90 | 84 | 76 | 67 | 56 |
| **0,75** | 128 | 127 | 124 | 122 | 118 | 115 | 110 | 105 |
| **1** | 149 | 149 | 148 | 147 | 145 | 143 | 140 | 137 |
| **1,5** | 187 | 187 | 187 | 187 | 187 | 187 | 187 | 186 |
| **2** | 224 | 224 | 224 | 224 | 224 | 224 | 224 | 224 |
| **3** | 299 | 299 | 299 | 299 | 299 | 299 | 299 | 299 |
| **4** | 373 | 373 | 373 | 373 | 373 | 373 | 373 | 373 |
| **5** | 448 | 448 | 448 | 448 | 448 | 448 | 448 | 448 |
| **6** | 522 | 522 | 522 | 522 | 522 | 522 | 522 | 522 |
| **7** | 597 | 597 | 597 | 597 | 597 | 597 | 597 | 597 |
| **8** | 671 | 671 | 671 | 671 | 671 | 671 | 671 | 671 |
| **9** | 746 | 746 | 746 | 746 | 746 | 746 | 746 | 746 |
| **10** | 820 | 820 | 820 | 820 | 820 | 820 | 820 | 820 |

*Datos en azul corresponden a toma externa / Values in blue correspond to external impulse

d=0,83 $Kg/m^3$ AC 10

| Ø16 | Pressures (Bar) vs Flow ($Nm^3/h$) | | | | | | | |
|---|---|---|---|---|---|---|---|---|
| **Pin / Pout** | **0,08** | **0,1** | **0,15** | **0,2** | **0,25** | **0,3** | **0,35** | **0,4** |
| **0,2** | 93 | 86 | 61 | - | - | - | - | - |
| **0,3** | 127 | 122 | 105 | 86 | 61 | - | - | - |
| **0,4** | 153 | 149 | 136 | 122 | 106 | 88 | 63 | - |
| **0,5** | 175 | 172 | 161 | 149 | 137 | 124 | 109 | 90 |
| **0,75** | 221 | 219 | 211 | 202 | 194 | 186 | 178 | 169 |
| **1** | 259 | 258 | 251 | 244 | 238 | 232 | 227 | 221 |
| **1,5** | 324 | 324 | 317 | 311 | 307 | 304 | 302 | 299 |
| **2** | 389 | 389 | 380 | 373 | 368 | 365 | 363 | 362 |
| **3** | 518 | 518 | 506 | 496 | 490 | 486 | 484 | 482 |
| **4** | 647 | 647 | 633 | 620 | 612 | 608 | 604 | 602 |
| **5** | 776 | 776 | 759 | 743 | 735 | 729 | 725 | 722 |
| **6** | 905 | 905 | 885 | 867 | 857 | 850 | 845 | 842 |
| **7** | 1034 | 1034 | 1011 | 991 | 979 | 971 | 966 | 962 |
| **8** | 1163 | 1163 | 1137 | 1114 | 1101 | 1092 | 1086 | 1082 |
| **9** | 1292 | 1292 | 1263 | 1238 | 1223 | 1213 | 1207 | 1202 |
| **10** | 0 | 0 | 1390 | 1362 | 1345 | 1335 | 1327 | 1322 |

*Datos en azul corresponden a toma externa / Values in blue correspond to external impulse

d=0,83 $Kg/m^3$ AC 10

DUNGS®
Combustion Controls

**Tablas de caudal / Flow tables (SI units)**

| Ø20 | Pressures (Bar) vs Flow ($Nm^3/h$) | | | | | | | |
|---|---|---|---|---|---|---|---|---|
| **Pin / Pout** | **0,08** | **0,1** | **0,15** | **0,2** | **0,25** | **0,3** | **0,35** | **0,4** |
| **0,2** | 112 | 100 | 69 | - | - | - | - | - |
| **0,3** | 152 | 142 | 120 | 98 | 70 | - | - | - |
| **0,4** | 184 | 174 | 155 | 139 | 121 | 100 | 72 | - |
| **0,5** | 210 | 200 | 184 | 170 | 157 | 142 | 124 | 103 |
| **0,75** | 266 | 255 | 241 | 230 | 222 | 213 | 203 | 193 |
| **1** | 311 | 301 | 286 | 278 | 271 | 265 | 259 | 252 |
| **1,5** | 390 | 377 | 362 | 355 | 350 | 347 | 344 | 341 |
| **2** | 468 | 452 | 434 | 425 | 420 | 417 | 414 | 413 |
| **3** | 623 | 603 | 578 | 566 | 559 | 555 | 552 | 550 |
| **4** | 778 | 753 | 722 | 707 | 699 | 693 | 689 | 686 |
| **5** | 933 | 903 | 866 | 848 | 838 | 832 | 827 | 823 |
| **6** | 1088 | 1053 | 1010 | 989 | 978 | 970 | 964 | 960 |
| **7** | 0 | 0 | 1154 | 1130 | 1117 | 1108 | 1102 | 1097 |
| **8** | 0 | 0 | 0 | 1272 | 1256 | 1246 | 1239 | 1234 |
| **9** | 0 | 0 | 0 | 0 | 1396 | 1385 | 1377 | 1371 |
| **10** | 0 | 0 | 0 | 0 | 0 | 1523 | 1514 | 1508 |

*Datos en azul corresponden a toma externa / Values in blue correspond to external impulse

d=0,83 $Kg/m^3$ AC 10

| Ø25 | Pressures (Bar) vs Flow ($Nm^3/h$) | | | | | | | |
|---|---|---|---|---|---|---|---|---|
| **Pin / Pout** | **0,08** | **0,1** | **0,15** | **0,2** | **0,25** | **0,3** | **0,35** | **0,4** |
| **0,2** | 122 | 109 | 75 | - | - | - | - | - |
| **0,3** | 165 | 154 | 131 | 107 | 76 | - | - | - |
| **0,4** | 199 | 189 | 169 | 151 | 132 | 109 | 78 | - |
| **0,5** | 229 | 218 | 200 | 185 | 170 | 154 | 135 | 112 |
| **0,75** | 289 | 278 | 261 | 251 | 241 | 231 | 221 | 209 |
| **1** | 338 | 327 | 311 | 302 | 295 | 288 | 281 | 274 |
| **1,5** | 424 | 410 | 393 | 385 | 381 | 377 | 374 | 371 |
| **2** | 508 | 492 | 472 | 462 | 457 | 453 | 450 | 448 |
| **3** | 677 | 655 | 628 | 615 | 608 | 603 | 600 | 597 |
| **4** | 845 | 818 | 785 | 769 | 760 | 754 | 749 | 746 |
| **5** | 1014 | 981 | 941 | 922 | 911 | 904 | 899 | 895 |
| **6** | 0 | 0 | 1098 | 1075 | 1063 | 1054 | 1048 | 1044 |
| **7** | 0 | 0 | 0 | 1229 | 1214 | 1204 | 1198 | 1193 |
| **8** | 0 | 0 | 0 | 0 | 1366 | 1355 | 1347 | 1342 |
| **9** | 0 | 0 | 0 | 0 | 0 | 1505 | 1497 | 1490 |
| **10** | 0 | 0 | 0 | 0 | 0 | 0 | 0 | 0 |

*Datos en azul corresponden a toma externa / Values in blue correspond to external impulse

d=0,83 $Kg/m^3$ AC 10

DUNGS®
Combustion Controls

**Tablas de caudal / Flow tables (SI units)**

| Ø30 | Pressures (Bar) vs Flow ($Nm^3/h$) | | | | | | | |
|---|---|---|---|---|---|---|---|---|
| **Pin / Pout** | **0,08** | **0,1** | **0,15** | **0,2** | **0,25** | **0,3** | **0,35** | **0,4** |
| **0,2** | 129 | 115 | 80 | - | - | - | - | - |
| **0,3** | 174 | 162 | 137 | 112 | 80 | - | - | - |
| **0,4** | 209 | 197 | 177 | 158 | 138 | 114 | 82 | - |
| **0,5** | 238 | 227 | 208 | 193 | 177 | 160 | 141 | 117 |
| **0,75** | 297 | 286 | 269 | 258 | 248 | 238 | 227 | 215 |
| **1** | 344 | 332 | 316 | 307 | 300 | 293 | 286 | 279 |
| **1,5** | 420 | 407 | 390 | 382 | 378 | 374 | 371 | 368 |
| **2** | 491 | 475 | 456 | 447 | 441 | 438 | 435 | 434 |
| **3** | 620 | 600 | 576 | 564 | 557 | 553 | 550 | 548 |
| **4** | 0 | 0 | 837 | 820 | 811 | 804 | 800 | 796 |
| **5** | 0 | 0 | 0 | 984 | 972 | 965 | 959 | 955 |
| **6** | 0 | 0 | 0 | 0 | 1134 | 1125 | 1119 | 1114 |
| **7** | 0 | 0 | 0 | 0 | 0 | 1286 | 1278 | 1273 |
| **8** | 0 | 0 | 0 | 0 | 0 | 0 | 1438 | 1432 |
| **9** | 0 | 0 | 0 | 0 | 0 | 0 | 0 | 0 |
| **10** | 0 | 0 | 0 | 0 | 0 | 0 | 0 | 0 |

*Datos en azul corresponden a toma externa / Values in blue correspond to external impulse

d=0,83 $Kg/m^3$ AC 10

| Ø35 | Pressures (Bar) vs Flow ($Nm^3/h$) | | | | | | | |
|---|---|---|---|---|---|---|---|---|
| **Pin / Pout** | **0,08** | **0,1** | **0,15** | **0,2** | **0,25** | **0,3** | **0,35** | **0,4** |
| **0,2** | 133 | 119 | 82 | - | - | - | - | - |
| **0,3** | 179 | 166 | 141 | 115 | 82 | - | - | - |
| **0,4** | 213 | 202 | 181 | 162 | 141 | 117 | 84 | - |
| **0,5** | 242 | 231 | 212 | 196 | 180 | 163 | 143 | 119 |
| **0,75** | 299 | 287 | 271 | 259 | 249 | 239 | 228 | 217 |
| **1** | 342 | 330 | 314 | 305 | 298 | 291 | 284 | 277 |
| **1,5** | 407 | 394 | 378 | 370 | 366 | 362 | 359 | 356 |
| **2** | 462 | 448 | 429 | 420 | 415 | 412 | 410 | 408 |
| **3** | 0 | 0 | 697 | 683 | 675 | 669 | 665 | 663 |
| **4** | 0 | 0 | 0 | 853 | 843 | 836 | 831 | 828 |
| **5** | 0 | 0 | 0 | 0 | 1011 | 1003 | 997 | 993 |
| **6** | 0 | 0 | 0 | 0 | 0 | 1169 | 1163 | 1158 |
| **7** | 0 | 0 | 0 | 0 | 0 | 0 | 1329 | 1323 |
| **8** | 0 | 0 | 0 | 0 | 0 | 0 | 0 | 0 |
| **9** | 0 | 0 | 0 | 0 | 0 | 0 | 0 | 0 |
| **10** | 0 | 0 | 0 | 0 | 0 | 0 | 0 | 0 |

*Datos en azul corresponden a toma externa / Values in blue correspond to external impulse

d=0,83 $Kg/m^3$ AC 10

DUNGS®
Combustion Controls

**Tablas de caudal / Flow tables (Imperial units)**

| Ø12 | Pressures (Psig/"WC) vs Flow (SCFH) | | | | | | | |
|---|---|---|---|---|---|---|---|---|
| **Pin / Pout** | **32 "WC** | **40 "WC** | **60 "WC** | **80 "WC** | **100 "WC** | **121 "WC** | **141 "WC** | **161 "WC** |
| **3 Psig** | 1905 | 1755 | 1269 | - | - | - | - | - |
| **4 Psig** | 2580 | 2482 | 2197 | 1832 | 1322 | - | - | - |
| **6 Psig** | 3112 | 3040 | 2837 | 2591 | 2290 | 1906 | 1373 | - |
| **7 Psig** | 3565 | 3511 | 3357 | 3174 | 2956 | 2696 | 2379 | 1978 |
| **11 Psig** | 4502 | 4475 | 4395 | 4297 | 4181 | 4044 | 3885 | 3700 |
| **15 Psig** | 5276 | 5266 | 5231 | 5183 | 5121 | 5044 | 4952 | 4844 |
| **22 Psig** | 6611 | 6611 | 6611 | 6611 | 6611 | 6604 | 6587 | 6559 |
| **29 Psig** | 7926 | 7926 | 7926 | 7926 | 7926 | 7926 | 7926 | 7926 |
| **44 Psig** | 10557 | 10557 | 10557 | 10557 | 10557 | 10557 | 10557 | 10557 |
| **58 Psig** | 13187 | 13187 | 13187 | 13187 | 13187 | 13187 | 13187 | 13187 |
| **73 Psig** | 15818 | 15818 | 15818 | 15818 | 15818 | 15818 | 15818 | 15818 |
| **87 Psig** | 18449 | 18449 | 18449 | 18449 | 18449 | 18449 | 18449 | 18449 |
| **102 Psig** | 21079 | 21079 | 21079 | 21079 | 21079 | 21079 | 21079 | 21079 |
| **116 Psig** | 23710 | 23710 | 23710 | 23710 | 23710 | 23710 | 23710 | 23710 |
| **131 Psig** | 26341 | 26341 | 26341 | 26341 | 26341 | 26341 | 26341 | 26341 |
| **145 Psig** | 28971 | 28971 | 28971 | 28971 | 28971 | 28971 | 28971 | 28971 |

*Datos en azul corresponden a toma externa / Values in blue correspond to external impulse

d=0,05 lb/ft$^3$ AC 10

| Ø16 | Pressures (Psig/"WC) vs Flow (SCFH) | | | | | | | |
|---|---|---|---|---|---|---|---|---|
| **Pin / Pout** | **32 "WC** | **40 "WC** | **60 "WC** | **80 "WC** | **100 "WC** | **121 "WC** | **141 "WC** | **161 "WC** |
| **3 Psig** | 3299 | 3039 | 2149 | - | - | - | - | - |
| **4 Psig** | 4467 | 4298 | 3722 | 3041 | 2168 | - | - | - |
| **6 Psig** | 5388 | 5264 | 4805 | 4301 | 3755 | 3101 | 2222 | - |
| **7 Psig** | 6173 | 6079 | 5685 | 5267 | 4848 | 4386 | 3848 | 3186 |
| **11 Psig** | 7796 | 7749 | 7444 | 7132 | 6855 | 6579 | 6284 | 5960 |
| **15 Psig** | 9135 | 9118 | 8860 | 8601 | 8396 | 8205 | 8011 | 7803 |
| **22 Psig** | 11447 | 11447 | 11197 | 10971 | 10839 | 10743 | 10655 | 10566 |
| **29 Psig** | 13724 | 13724 | 13425 | 13154 | 12996 | 12894 | 12821 | 12767 |
| **44 Psig** | 18280 | 18280 | 17880 | 17519 | 17310 | 17173 | 17076 | 17005 |
| **58 Psig** | 22835 | 22835 | 22336 | 21885 | 21623 | 21452 | 21332 | 21242 |
| **73 Psig** | 27390 | 27390 | 26791 | 26251 | 25937 | 25731 | 25587 | 25479 |
| **87 Psig** | 31945 | 31945 | 31247 | 30616 | 30250 | 30011 | 29842 | 29717 |
| **102 Psig** | 36500 | 36500 | 35702 | 34982 | 34563 | 34290 | 34097 | 33954 |
| **116 Psig** | 41055 | 41055 | 40158 | 39347 | 38877 | 38569 | 38353 | 38192 |
| **131 Psig** | 45610 | 45610 | 44613 | 43713 | 43190 | 42849 | 42608 | 42429 |
| **145 Psig** | 0 | 0 | 49069 | 48079 | 47504 | 47128 | 46863 | 46666 |

*Datos en azul corresponden a toma externa / Values in blue correspond to external impulse

d=0,05 lb/ft$^3$ AC 10

DUNGS®
Combustion Controls

**Tablas de caudal / Flow tables (Imperial units)**

| Ø20 | Pressures (Psig/"WC) vs Flow (SCFH) | | | | | | | |
|---|---|---|---|---|---|---|---|---|
| **Pin / Pout** | **32 "WC** | **40 "WC** | **60 "WC** | **80 "WC** | **100 "WC** | **121 "WC** | **141 "WC** | **161 "WC** |
| **3 Psig** | 3969 | 3538 | 2452 | - | - | - | - | - |
| **4 Psig** | 5373 | 5004 | 4247 | 3470 | 2474 | - | - | - |
| **6 Psig** | 6481 | 6128 | 5483 | 4907 | 4285 | 3539 | 2535 | - |
| **7 Psig** | 7425 | 7076 | 6487 | 6010 | 5531 | 5005 | 4391 | 3635 |
| **11 Psig** | 9377 | 9020 | 8494 | 8138 | 7823 | 7507 | 7171 | 6801 |
| **15 Psig** | 10988 | 10614 | 10110 | 9815 | 9581 | 9363 | 9141 | 8904 |
| **22 Psig** | 13769 | 13325 | 12776 | 12519 | 12369 | 12259 | 12158 | 12056 |
| **29 Psig** | 16508 | 15976 | 15319 | 15009 | 14830 | 14713 | 14630 | 14569 |
| **44 Psig** | 21987 | 21279 | 20403 | 19991 | 19752 | 19596 | 19486 | 19404 |
| **58 Psig** | 27466 | 26582 | 25487 | 24973 | 24674 | 24479 | 24341 | 24239 |
| **73 Psig** | 32945 | 31884 | 30571 | 29954 | 29596 | 29362 | 29197 | 29074 |
| **87 Psig** | 38424 | 37187 | 35655 | 34936 | 34518 | 34245 | 34052 | 33909 |
| **102 Psig** | 0 | 0 | 40739 | 39917 | 39440 | 39128 | 38908 | 38745 |
| **116 Psig** | 0 | 0 | 0 | 44899 | 44362 | 44011 | 43764 | 43580 |
| **131 Psig** | 0 | 0 | 0 | 0 | 49284 | 48894 | 48619 | 48415 |
| **145 Psig** | 0 | 0 | 0 | 0 | 0 | 53777 | 53475 | 53250 |

*Datos en azul corresponden a toma externa / Values in blue correspond to external impulse

d=0,05 lb/ft$^3$ AC 10

| Ø25 | Pressures (Psig/"WC) vs Flow (SCFH) | | | | | | | |
|---|---|---|---|---|---|---|---|---|
| **Pin / Pout** | **32 "WC** | **40 "WC** | **60 "WC** | **80 "WC** | **100 "WC** | **121 "WC** | **141 "WC** | **161 "WC** |
| **3 Psig** | 4314 | 3846 | 2665 | - | - | - | - | - |
| **4 Psig** | 5841 | 5439 | 4616 | 3772 | 2689 | - | - | - |
| **6 Psig** | 7044 | 6661 | 5960 | 5334 | 4657 | 3846 | 2756 | - |
| **7 Psig** | 8070 | 7691 | 7052 | 6533 | 6012 | 5440 | 4773 | 3951 |
| **11 Psig** | 10193 | 9805 | 9233 | 8845 | 8503 | 8160 | 7794 | 7392 |
| **15 Psig** | 11944 | 11537 | 10989 | 10668 | 10414 | 10177 | 9936 | 9678 |
| **22 Psig** | 14966 | 14484 | 13887 | 13607 | 13444 | 13325 | 13215 | 13105 |
| **29 Psig** | 17944 | 17366 | 16651 | 16315 | 16119 | 15992 | 15902 | 15835 |
| **44 Psig** | 23899 | 23129 | 22177 | 21729 | 21469 | 21300 | 21180 | 21091 |
| **58 Psig** | 29855 | 28893 | 27703 | 27144 | 26819 | 26607 | 26458 | 26347 |
| **73 Psig** | 35810 | 34657 | 33229 | 32559 | 32169 | 31915 | 31736 | 31602 |
| **87 Psig** | 0 | 0 | 38756 | 37974 | 37519 | 37223 | 37013 | 36858 |
| **102 Psig** | 0 | 0 | 0 | 43388 | 42869 | 42530 | 42291 | 42114 |
| **116 Psig** | 0 | 0 | 0 | 0 | 48219 | 47838 | 47569 | 47369 |
| **131 Psig** | 0 | 0 | 0 | 0 | 0 | 53146 | 52847 | 52625 |
| **145 Psig** | 0 | 0 | 0 | 0 | 0 | 0 | 0 | 0 |

*Datos en azul corresponden a toma externa / Values in blue correspond to external impulse

d=0,05 lb/ft$^3$ AC 10

DUNGS®
Combustion Controls

**Tablas de caudal / Flow tables (Imperial units)**

| Ø30 | Pressures (Psig/"WC) vs Flow (SCFH) | | | | | | | |
|---|---|---|---|---|---|---|---|---|
| **Pin / Pout** | **32 "WC** | **40 "WC** | **60 "WC** | **80 "WC** | **100 "WC** | **121 "WC** | **141 "WC** | **161 "WC** |
| **3 Psig** | 4558 | 4064 | 2816 | - | - | - | - | - |
| **4 Psig** | 6142 | 5720 | 4855 | 3967 | 2828 | - | - | - |
| **6 Psig** | 7373 | 6972 | 6238 | 5583 | 4875 | 4026 | 2884 | - |
| **7 Psig** | 8406 | 8012 | 7345 | 6805 | 6263 | 5666 | 4972 | 4116 |
| **11 Psig** | 10490 | 10091 | 9502 | 9103 | 8751 | 8398 | 8021 | 7608 |
| **15 Psig** | 12143 | 11729 | 11172 | 10846 | 10587 | 10346 | 10101 | 9840 |
| **22 Psig** | 14841 | 14363 | 13772 | 13494 | 13332 | 13214 | 13105 | 12995 |
| **29 Psig** | 17346 | 16787 | 16096 | 15771 | 15582 | 15459 | 15372 | 15308 |
| **44 Psig** | 21908 | 21202 | 20329 | 19919 | 19680 | 19525 | 19415 | 19333 |
| **58 Psig** | 0 | 0 | 29568 | 28971 | 28624 | 28398 | 28238 | 28120 |
| **73 Psig** | 0 | 0 | 0 | 34750 | 34335 | 34063 | 33872 | 33729 |
| **87 Psig** | 0 | 0 | 0 | 0 | 40045 | 39728 | 39505 | 39339 |
| **102 Psig** | 0 | 0 | 0 | 0 | 0 | 45393 | 45138 | 44948 |
| **116 Psig** | 0 | 0 | 0 | 0 | 0 | 0 | 50771 | 50558 |
| **131 Psig** | 0 | 0 | 0 | 0 | 0 | 0 | 0 | 0 |
| **145 Psig** | 0 | 0 | 0 | 0 | 0 | 0 | 0 | 0 |

*Datos en azul corresponden a toma externa / Values in blue correspond to external impulse

d=0,05 lb/ft$^3$ AC 10

| Ø35 | Pressures (Psig/"WC) vs Flow (SCFH) | | | | | | | |
|---|---|---|---|---|---|---|---|---|
| **Pin / Pout** | **32 "WC** | **40 "WC** | **60 "WC** | **80 "WC** | **100 "WC** | **121 "WC** | **141 "WC** | **161 "WC** |
| **3 Psig** | 4702 | 4192 | 2905 | - | - | - | - | - |
| **4 Psig** | 6308 | 5874 | 4986 | 4073 | 2904 | - | - | - |
| **6 Psig** | 7537 | 7127 | 6377 | 5707 | 4983 | 4116 | 2949 | - |
| **7 Psig** | 8554 | 8153 | 7475 | 6925 | 6373 | 5766 | 5059 | 4188 |
| **11 Psig** | 10550 | 10148 | 9556 | 9155 | 8801 | 8445 | 8067 | 7651 |
| **15 Psig** | 12063 | 11652 | 11099 | 10775 | 10518 | 10279 | 10035 | 9775 |
| **22 Psig** | 14367 | 13905 | 13332 | 13063 | 12907 | 12792 | 12687 | 12580 |
| **29 Psig** | 16329 | 15803 | 15152 | 14846 | 14669 | 14553 | 14471 | 14410 |
| **44 Psig** | 0 | 0 | 24603 | 24107 | 23818 | 23630 | 23497 | 23399 |
| **58 Psig** | 0 | 0 | 0 | 30114 | 29754 | 29518 | 29352 | 29229 |
| **73 Psig** | 0 | 0 | 0 | 0 | 35689 | 35407 | 35208 | 35060 |
| **87 Psig** | 0 | 0 | 0 | 0 | 0 | 41295 | 41063 | 40891 |
| **102 Psig** | 0 | 0 | 0 | 0 | 0 | 0 | 46918 | 46721 |
| **116 Psig** | 0 | 0 | 0 | 0 | 0 | 0 | 0 | 0 |
| **131 Psig** | 0 | 0 | 0 | 0 | 0 | 0 | 0 | 0 |
| **145 Psig** | 0 | 0 | 0 | 0 | 0 | 0 | 0 | 0 |

*Datos en azul corresponden a toma externa / Values in blue correspond to external impulse

d=0,05 lb/ft$^3$ AC 10

Plano CAD, no cambiar manualmente!
CAD-Drawing, do not change manually!

This design and/or document is proprietary and protected by copyright.
It may not, without our prior express consent, be copied nor transmitted
to any third party. It must be returned to us upon discharge of the order.

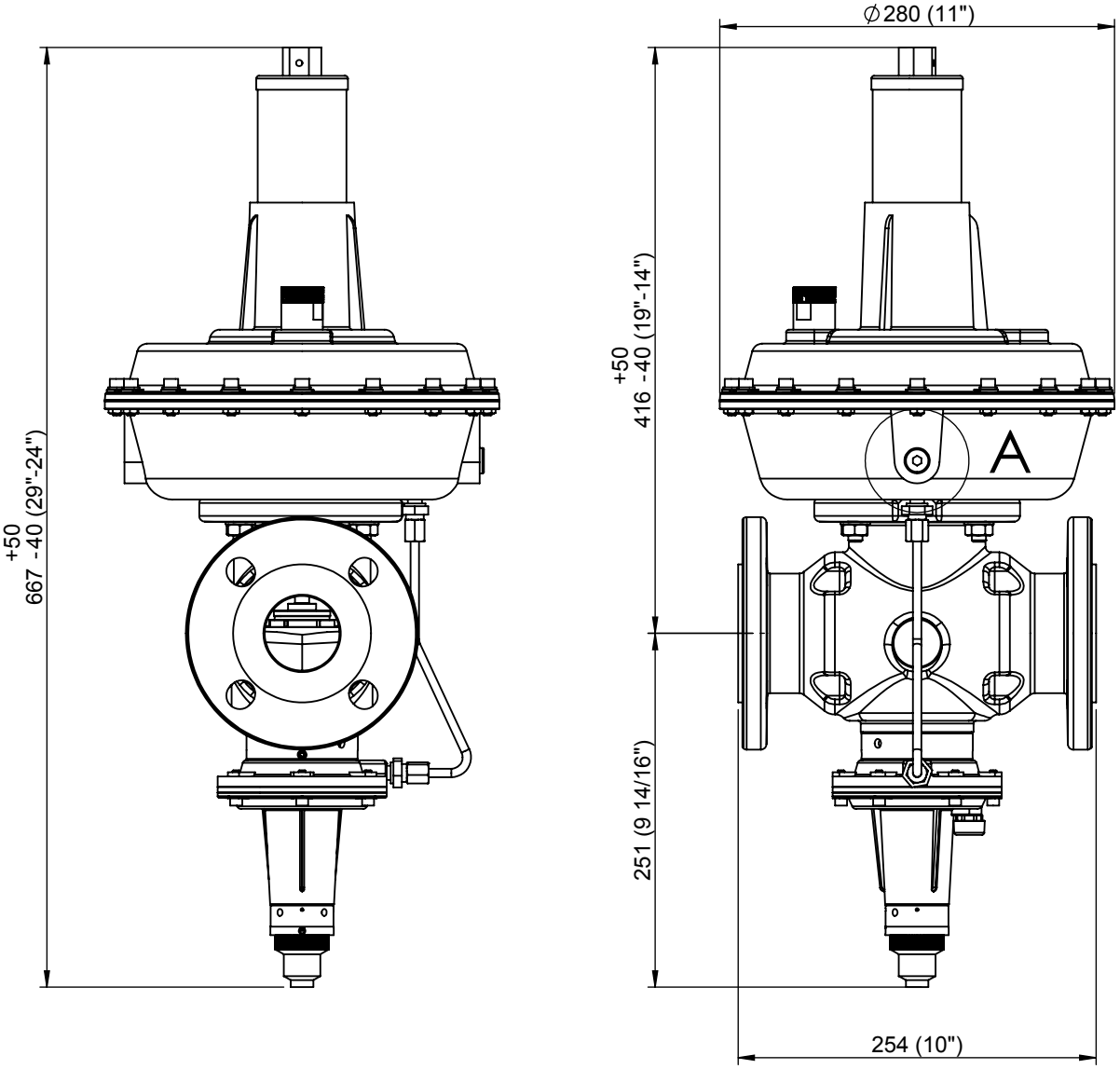


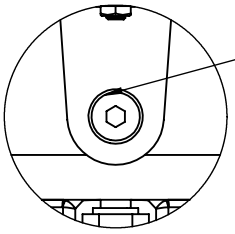


DETALLE A
ESCALA 2 : 5

3D

| Rev | Descripción Modificación | Fecha | Nom |
|---|---|---|---|
| | | | |
| | | | |
| | | | |
| | | | |
| | | | |
| | | | |
| | | | |
| | | | |
| | | | |
| | | | |
| | | | |
| | | | |

**Karl Dungs S.L.U.**
**Combustion Controls**
Avinguda de Can Roqueta, 15 - Pol. Can Roqueta
E-08202 - Sabadell
Barcelona - ESPAÑA

| | Fecha | Nombre | Firmado |
|---|---|---|---|
| Dibujado | 31/10/2018 | A.Rof | |
| Verificado | 31/10/2018 | J.Inglés | |
| Aprobado | 31/10/2018 | GX | |

Tolerancias según ISO 2768
TOLERANCIAS GENERALES ISO 2768-mK
(MEDIUM) TOLERANCIAS LINEALES
Roscas a 6g/6H y longitudes +1.0/-0

Rz 12.5 ( )

Eliminar rebabas y cantos vivos

Escala: 1:5

Material:

Acabado:

Tratamiento:

Peso: 22210.69 gr.

Descripción:
DIMENSIONS FRM-NOC100050ND/MD

| Código Pieza | Rev. | Formato | Pág. |
|---|---|---|---|
| FRM-NOC100050ND_MD | 0 | A4 | 1 de 1 |

Dimensiones en mm (inch)

Queda prohibida la preproducción total o parcial de este documento
y del contenido del mismo sin la autorización escrita de Karl Dungs S.L.U.
Todos los derechos reservados.

## ESPECIFICACIONES TÉCNICAS / TECHNICAL SPECIFICATION

DUNGS®
Combustion Controls

Regulador de presión con válvula de seguridad, conforme a las normas EN-334 y EN-14382 /
Pressure regulator with safety shut-off valve, in accordance with the standards EN-334 and EN-14382

| | |
|---|---|
| Presión de operación / Operating pressure | Max. 10 Bar / 1000 kPa / 145 Psig |
| Rango de presión de salida FRM / Outlet pressure range FRM | Ver tabla de Selección / See Set point Table |
| Temperatura máxima ambiental / Ambient maximum temperature | 60 ºC / 145ºF |
| Temperatura minima ambiental / Ambient minimum temperature | -20 ºC / -10 ºF |
| Fluido / Flow | Gas Natural, GLP / Natural Gas, LPG |
| Posición de montaje / Mounting Position | 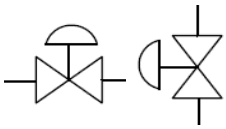 *Puede variar el tarado para presiones inferiores a 300 mbar / for pressures below 300 mbar setpoint can be altered |
| Tipo de Construcción / Construction Type: | DS (De resistencia diferencial) / DS (Diferential strenght) |
| Materiales / Materials — Cuerpo / Body | Hierro fundido / Cast iron EN GJS 500-7 or EN GJS 400-15 |
| Actuador / Actuator | Aluminio / Aluminium |
| Membranas / Membranes | NBR EN549 conform |
| Diametro Nominal / Nominal Diameter | Bridas de conexión PN 25 según EN1092-1 / Connecting flange PN 25 according to EN1092-1 DN 50 |

| | BSP / SAV | BSP | NPT / SAV | NPT |
|---|---|---|---|---|
| Codigo de producto / Product's code | 279083 | 279095 | 280258 | 280270 |

Producto diseñado acorde a las normas EN-334 y EN-14382 / Product designed in accordance to EN-334 and EN-14382
Categoría III (Regulador) y IV (Válvula de seguridad) acorde a PED 2014/68/UE & CRN B51.14 pendiente
Product category III (Regulator) and IV (Safety valve) according to PED 2014/68/UE & CRN B51.14 pending

| Muelle de regulación / Regulation spring | | | | | | | | | | | |
|---|---|---|---|---|---|---|---|---|---|---|---|
| Ø hilo / wire | Rango / Range (min-Max) | | | | | | | | | Color/Color | codigo/code |
| 4,5 | 300 | 500 | (mbar) | 30 | 50 | (kPa) | 4,4 | 7,3 | (psig) | blanco/white | 286355 |
| 5 | 450 | 700 | (mbar) | 45 | 70 | (kPa) | 6,5 | 10,2 | (psig) | amarillo/yellow | 286356 |
| 5,5 | 550 | 900 | (mbar) | 55 | 90 | (kPa) | 8 | 13,1 | (psig) | azul/blue | 286357 |
| 6 | 650 | 1150 | (mbar) | 65 | 115 | (kPa) | 9,4 | 16,7 | (psig) | negro/black | 286358 |
| 6,5 | 1000 | 1500 | (mbar) | 100 | 150 | (kPa) | 14,5 | 21,8 | (psig) | lila/purple | 286359 |

| Muelle de mínima presión / Under pressure spring (UPSO) | | | | | | | | | | | |
|---|---|---|---|---|---|---|---|---|---|---|---|
| Ø hilo / wire | Rango / Range (min-Max) | | | | | | | | | Color/Color | codigo/code |
| 2,5 | 150 | 500 | (mbar) | 15 | 50 | (kPa) | 2,2 | 7,3 | (psig) | lila/purple | 270178 |
| 2,8 | 300 | 1000 | (mbar) | 30 | 100 | (kPa) | 4,4 | 14,5 | (psig) | naranja/orange | 270179 |
| 3 | 800 | 1400 | (mbar) | 80 | 140 | (kPa) | 11,6 | 20,3 | (psig) | plata/silver | 270180 |

| Muelle de máxima presión / Over pressure spring (OPSO) | | | | | | | | | | | |
|---|---|---|---|---|---|---|---|---|---|---|---|
| Ø hilo / wire | Rango / Range (min-Max) | | | | | | | | | Color/Color | codigo/code |
| 3,5 | 500 | 1000 | (mbar) | 50 | 100 | (kPa) | 7,3 | 14,5 | (psig) | azul/blue | 270185 |
| 3,75 | 700 | 1300 | (mbar) | 70 | 130 | (kPa) | 10,2 | 18,9 | (psig) | negro/black | 270186 |
| 4 | 1000 | 1800 | (mbar) | 100 | 180 | (kPa) | 14,5 | 26,1 | (psig) | lila/purple | 270187 |
| 4,5 | 1300 | 2500 | (mbar) | 130 | 250 | (kPa) | 18,9 | 36,3 | (psig) | naranja/orange | 270188 |
| 4,8 | 1800 | 3500 | (mbar) | 180 | 350 | (kPa) | 26,1 | 50,8 | (psig) | rosa/pink | 270189 |

| Orificios / Orifices | | | | | | | | | | | | |
|---|---|---|---|---|---|---|---|---|---|---|---|---|
| Medida/size | Ø12 | | Ø16 | | Ø20 | | Ø25 | | Ø30 | | Ø35 | |
| $P_{umax}$* (bar/psig) | 10 | 145 | 10 | 145 | 10 | 145 | 8 | 116 | 8 | 116 | 6 | 87 |

*Máxima presión de entrada / Maximum inlet pressure

Regulador de gas para media presión / Gas regulator for medium pressure

**FRM-NOC 100050HD / SAV HD**

DUNGS®
Combustion Controls

**Tablas de caudal / Flow tables (SI units)**

| Ø12 | Pressures (Bar) vs Flow ($Nm^3/h$) | | | | | | | |
|---|---|---|---|---|---|---|---|---|
| **Pin / Pout** | **0,3** | **0,4** | **0,5** | **0,7** | **0,9** | **1,1** | **1,3** | **1,5** |
| **0,2** | - | - | - | - | - | - | - | - |
| **0,3** | - | - | - | - | - | - | - | - |
| **0,4** | 46 | - | - | - | - | - | - | - |
| **0,5** | 66 | 47 | - | - | - | - | - | - |
| **0,75** | 98 | 88 | 76 | 36 | - | - | - | - |
| **1** | 123 | 115 | 107 | 87 | 53 | - | - | - |
| **1,5** | 161 | 156 | 152 | 142 | 129 | 110 | 81 | - |
| **2** | 193 | 189 | 186 | 182 | 175 | 166 | 152 | 134 |
| **3** | 257 | 251 | 248 | 244 | 242 | 240 | 237 | 232 |
| **4** | 321 | 314 | 310 | 305 | 302 | 301 | 300 | 299 |
| **5** | 385 | 376 | 371 | 366 | 363 | 361 | 360 | 359 |
| **6** | 449 | 439 | 433 | 427 | 423 | 421 | 419 | 418 |
| **7** | 513 | 501 | 495 | 487 | 483 | 481 | 479 | 478 |
| **8** | 577 | 564 | 556 | 548 | 544 | 541 | 539 | 538 |
| **9** | 641 | 626 | 618 | 609 | 604 | 601 | 599 | 597 |
| **10** | 705 | 689 | 680 | 670 | 664 | 661 | 659 | 657 |

*Datos en azul corresponden a toma externa / Values in blue correspond to external impulse

d=0,83 $Kg/m^3$ AC 10

| Ø16 | Pressures (Bar) vs Flow ($Nm^3/h$) | | | | | | | |
|---|---|---|---|---|---|---|---|---|
| **Pin / Pout** | **0,3** | **0,4** | **0,5** | **0,7** | **0,9** | **1,1** | **1,3** | **1,5** |
| **0,2** | - | - | - | - | - | - | - | - |
| **0,3** | - | - | - | - | - | - | - | - |
| **0,4** | 59 | - | - | - | - | - | - | - |
| **0,5** | 84 | 60 | - | - | - | - | - | - |
| **0,75** | 126 | 112 | 97 | 45 | - | - | - | - |
| **1** | 157 | 147 | 137 | 111 | 67 | - | - | - |
| **1,5** | 205 | 199 | 194 | 182 | 165 | 141 | 104 | - |
| **2** | 246 | 241 | 237 | 232 | 223 | 211 | 194 | 171 |
| **3** | 328 | 320 | 316 | 311 | 309 | 307 | 303 | 296 |
| **4** | 409 | 400 | 395 | 389 | 386 | 384 | 383 | 382 |
| **5** | 491 | 480 | 474 | 467 | 463 | 460 | 459 | 458 |
| **6** | 573 | 560 | 553 | 544 | 540 | 537 | 535 | 534 |
| **7** | 654 | 640 | 631 | 622 | 617 | 614 | 611 | 610 |
| **8** | 736 | 720 | 710 | 700 | 694 | 690 | 688 | 686 |
| **9** | 818 | 799 | 789 | 777 | 771 | 767 | 764 | 762 |
| **10** | 899 | 879 | 868 | 855 | 848 | 843 | 840 | 838 |

*Datos en azul corresponden a toma externa / Values in blue correspond to external impulse

d=0,83 $Kg/m^3$ AC 10

DUNGS® Combustion Controls

**Tablas de caudal / Flow tables (SI units)**

| Ø20 | Pressures (Bar) vs Flow ($Nm^3/h$) | | | | | | | |
|---|---|---|---|---|---|---|---|---|
| **Pin / Pout** | **0,3** | **0,4** | **0,5** | **0,7** | **0,9** | **1,1** | **1,3** | **1,5** |
| **0,2** | - | - | - | - | - | - | - | - |
| **0,3** | - | - | - | - | - | - | - | - |
| **0,4** | 72 | - | - | - | - | - | - | - |
| **0,5** | 102 | 73 | - | - | - | - | - | - |
| **0,75** | 154 | 137 | 119 | 56 | - | - | - | - |
| **1** | 192 | 180 | 168 | 136 | 82 | - | - | - |
| **1,5** | 251 | 244 | 237 | 223 | 202 | 172 | 127 | - |
| **2** | 301 | 295 | 291 | 284 | 273 | 259 | 238 | 209 |
| **3** | 401 | 392 | 387 | 381 | 378 | 376 | 371 | 362 |
| **4** | 501 | 490 | 484 | 476 | 473 | 470 | 468 | 467 |
| **5** | 601 | 588 | 580 | 571 | 567 | 564 | 562 | 560 |
| **6** | 701 | 686 | 677 | 666 | 661 | 658 | 655 | 654 |
| **7** | 0 | 0 | 773 | 762 | 755 | 751 | 749 | 747 |
| **8** | 0 | 0 | 0 | 857 | 850 | 845 | 842 | 840 |
| **9** | 0 | 0 | 0 | 0 | 944 | 939 | 936 | 933 |
| **10** | 0 | 0 | 0 | 0 | 0 | 1033 | 1029 | 1026 |

*Datos en azul corresponden a toma externa / Values in blue correspond to external impulse

d=0,83 $Kg/m^3$ AC 10

| Ø25 | Pressures (Bar) vs Flow ($Nm^3/h$) | | | | | | | |
|---|---|---|---|---|---|---|---|---|
| **Pin / Pout** | **0,3** | **0,4** | **0,5** | **0,7** | **0,9** | **1,1** | **1,3** | **1,5** |
| **0,2** | - | - | - | - | - | - | - | - |
| **0,3** | - | - | - | - | - | - | - | - |
| **0,4** | 86 | - | - | - | - | - | - | - |
| **0,5** | 122 | 87 | - | - | - | - | - | - |
| **0,75** | 183 | 163 | 141 | 66 | - | - | - | - |
| **1** | 228 | 214 | 199 | 162 | 98 | - | - | - |
| **1,5** | 298 | 290 | 282 | 264 | 240 | 205 | 151 | - |
| **2** | 358 | 350 | 345 | 337 | 325 | 307 | 283 | 248 |
| **3** | 477 | 466 | 460 | 453 | 449 | 447 | 440 | 430 |
| **4** | 596 | 582 | 575 | 566 | 561 | 559 | 557 | 555 |
| **5** | 714 | 698 | 689 | 679 | 673 | 670 | 668 | 666 |
| **6** | 0 | 0 | 804 | 792 | 785 | 781 | 779 | 777 |
| **7** | 0 | 0 | 0 | 905 | 897 | 893 | 890 | 887 |
| **8** | 0 | 0 | 0 | 0 | 1009 | 1004 | 1001 | 998 |
| **9** | 0 | 0 | 0 | 0 | 0 | 1116 | 1112 | 1109 |
| **10** | 0 | 0 | 0 | 0 | 0 | 0 | 0 | 0 |

*Datos en azul corresponden a toma externa / Values in blue correspond to external impulse

d=0,83 $Kg/m^3$ AC 10

DUNGS®
Combustion Controls

**Tablas de caudal / Flow tables (SI units)**

| Ø30 | Pressures (Bar) vs Flow ($Nm^3/h$) | | | | | | | |
|---|---|---|---|---|---|---|---|---|
| **Pin / Pout** | **0,3** | **0,4** | **0,5** | **0,7** | **0,9** | **1,1** | **1,3** | **1,5** |
| **0,2** | 0 | 0 | 0 | 0 | 0 | 0 | 0 | 0 |
| **0,3** | 0 | 0 | 0 | 0 | 0 | 0 | 0 | 0 |
| **0,4** | 102 | 0 | 0 | 0 | 0 | 0 | 0 | 0 |
| **0,5** | 144 | 103 | 0 | 0 | 0 | 0 | 0 | 0 |
| **0,75** | 213 | 190 | 164 | 77 | 0 | 0 | 0 | 0 |
| **1** | 262 | 246 | 229 | 186 | 113 | 0 | 0 | 0 |
| **1,5** | 335 | 325 | 316 | 297 | 269 | 230 | 169 | 0 |
| **2** | 392 | 383 | 378 | 369 | 355 | 336 | 309 | 271 |
| **3** | 494 | 483 | 477 | 470 | 466 | 463 | 457 | 446 |
| **4** | 0 | 0 | 563 | 555 | 550 | 547 | 545 | 544 |
| **5** | 0 | 0 | 0 | 627 | 622 | 618 | 616 | 615 |
| **6** | 0 | 0 | 0 | 0 | 680 | 677 | 674 | 673 |
| **7** | 0 | 0 | 0 | 0 | 0 | 723 | 720 | 718 |
| **8** | 0 | 0 | 0 | 0 | 0 | 0 | 753 | 751 |
| **9** | 0 | 0 | 0 | 0 | 0 | 0 | 0 | 0 |
| **10** | 0 | 0 | 0 | 0 | 0 | 0 | 0 | 0 |

*Datos en azul corresponden a toma externa / Values in blue correspond to external impulse

d=0,83 Kg/m³ AC 10

| Ø35 | Pressures (Bar) vs Flow ($Nm^3/h$) | | | | | | | |
|---|---|---|---|---|---|---|---|---|
| **Pin / Pout** | **0,3** | **0,4** | **0,5** | **0,7** | **0,9** | **1,1** | **1,3** | **1,5** |
| **0,2** | 0 | 0 | 0 | 0 | 0 | 0 | 0 | 0 |
| **0,3** | 0 | 0 | 0 | 0 | 0 | 0 | 0 | 0 |
| **0,4** | 99 | 0 | 0 | 0 | 0 | 0 | 0 | 0 |
| **0,5** | 138 | 99 | 0 | 0 | 0 | 0 | 0 | 0 |
| **0,75** | 201 | 180 | 155 | 73 | 0 | 0 | 0 | 0 |
| **1** | 244 | 229 | 213 | 173 | 105 | 0 | 0 | 0 |
| **1,5** | 300 | 292 | 284 | 266 | 242 | 206 | 152 | 0 |
| **2** | 338 | 330 | 326 | 318 | 307 | 290 | 267 | 234 |
| **3** | 0 | 0 | 376 | 371 | 368 | 365 | 360 | 352 |
| **4** | 0 | 0 | 0 | 392 | 389 | 387 | 385 | 384 |
| **5** | 0 | 0 | 0 | 0 | 382 | 380 | 378 | 377 |
| **6** | 0 | 0 | 0 | 0 | 0 | 345 | 343 | 343 |
| **7** | 0 | 0 | 0 | 0 | 0 | 0 | 281 | 280 |
| **8** | 0 | 0 | 0 | 0 | 0 | 0 | 0 | 0 |
| **9** | 0 | 0 | 0 | 0 | 0 | 0 | 0 | 0 |
| **10** | 0 | 0 | 0 | 0 | 0 | 0 | 0 | 0 |

*Datos en azul corresponden a toma externa / Values in blue correspond to external impulse

d=0,83 Kg/m³ AC 10

DUNGS®
Combustion Controls

**Tablas de caudal / Flow tables (Imperial units)**

| Ø12 | Pressures (Psig/"WC) vs Flow (SCFH) | | | | | | | |
|---|---|---|---|---|---|---|---|---|
| **Pin / Pout** | **4 Psig** | **6 Psig** | **7 Psig** | **10 Psig** | **13 Psig** | **16 Psig** | **19 Psig** | **22 Psig** |
| **3 Psig** | - | - | - | - | - | - | - | - |
| **4 Psig** | - | - | - | - | - | - | - | - |
| **6 Psig** | 1638 | - | - | - | - | - | - | - |
| **7 Psig** | 2316 | 1661 | - | - | - | - | - | - |
| **11 Psig** | 3474 | 3107 | 2682 | 1257 | - | - | - | - |
| **15 Psig** | 4333 | 4068 | 3792 | 3079 | 1863 | - | - | - |
| **22 Psig** | 5673 | 5509 | 5363 | 5028 | 4564 | 3896 | 2872 | - |
| **29 Psig** | 6808 | 6656 | 6569 | 6410 | 6180 | 5844 | 5373 | 4721 |
| **44 Psig** | 9068 | 8866 | 8749 | 8619 | 8548 | 8492 | 8374 | 8177 |
| **58 Psig** | 11328 | 11075 | 10929 | 10766 | 10678 | 10623 | 10585 | 10557 |
| **73 Psig** | 13587 | 13284 | 13109 | 12914 | 12808 | 12742 | 12696 | 12663 |
| **87 Psig** | 15847 | 15493 | 15289 | 15062 | 14938 | 14861 | 14808 | 14769 |
| **102 Psig** | 18106 | 17703 | 17469 | 17209 | 17068 | 16980 | 16919 | 16875 |
| **116 Psig** | 20366 | 19912 | 19649 | 19357 | 19198 | 19099 | 19031 | 18981 |
| **131 Psig** | 22626 | 22121 | 21829 | 21505 | 21329 | 21218 | 21142 | 21087 |
| **145 Psig** | 24885 | 24330 | 24009 | 23652 | 23459 | 23337 | 23254 | 23193 |

*Datos en azul corresponden a toma externa / Values in blue correspond to external impulse

d=0,05 lb/ft$^3$ AC 10

| Ø16 | Pressures (Psig/"WC) vs Flow (SCFH) | | | | | | | |
|---|---|---|---|---|---|---|---|---|
| **Pin / Pout** | **4 Psig** | **6 Psig** | **7 Psig** | **10 Psig** | **13 Psig** | **16 Psig** | **19 Psig** | **22 Psig** |
| **3 Psig** | - | - | - | - | - | - | - | - |
| **4 Psig** | - | - | - | - | - | - | - | - |
| **6 Psig** | 2090 | - | - | - | - | - | - | - |
| **7 Psig** | 2955 | 2119 | - | - | - | - | - | - |
| **11 Psig** | 4433 | 3965 | 3422 | 1604 | - | - | - | - |
| **15 Psig** | 5529 | 5191 | 4839 | 3929 | 2378 | - | - | - |
| **22 Psig** | 7239 | 7029 | 6844 | 6416 | 5824 | 4972 | 3665 | - |
| **29 Psig** | 8688 | 8494 | 8382 | 8179 | 7886 | 7458 | 6857 | 6025 |
| **44 Psig** | 11571 | 11313 | 11164 | 10998 | 10908 | 10836 | 10685 | 10435 |
| **58 Psig** | 14454 | 14132 | 13946 | 13738 | 13626 | 13555 | 13507 | 13471 |
| **73 Psig** | 17338 | 16951 | 16727 | 16479 | 16344 | 16259 | 16201 | 16159 |
| **87 Psig** | 20221 | 19770 | 19509 | 19219 | 19062 | 18963 | 18895 | 18846 |
| **102 Psig** | 23105 | 22589 | 22291 | 21960 | 21780 | 21667 | 21590 | 21533 |
| **116 Psig** | 25988 | 25408 | 25073 | 24700 | 24498 | 24371 | 24284 | 24220 |
| **131 Psig** | 28871 | 28228 | 27855 | 27441 | 27216 | 27075 | 26978 | 26908 |
| **145 Psig** | 31755 | 31047 | 30637 | 30181 | 29934 | 29779 | 29672 | 29595 |

*Datos en azul corresponden a toma externa / Values in blue correspond to external impulse

d=0,05 lb/ft$^3$ AC 10

DUNGS®
Combustion Controls

**Tablas de caudal / Flow tables (Imperial units)**

| Ø20 | Pressures (Psig/"WC) vs Flow (SCFH) | | | | | | | |
|---|---|---|---|---|---|---|---|---|
| **Pin / Pout** | **4 Psig** | **6 Psig** | **7 Psig** | **10 Psig** | **13 Psig** | **16 Psig** | **19 Psig** | **22 Psig** |
| **3 Psig** | - | - | - | - | - | - | - | - |
| **4 Psig** | - | - | - | - | - | - | - | - |
| **6 Psig** | 2559 | - | - | - | - | - | - | - |
| **7 Psig** | 3619 | 2595 | - | - | - | - | - | - |
| **11 Psig** | 5428 | 4855 | 4190 | 1964 | - | - | - | - |
| **15 Psig** | 6770 | 6357 | 5926 | 4811 | 2911 | - | - | - |
| **22 Psig** | 8864 | 8607 | 8380 | 7857 | 7131 | 6088 | 4488 | - |
| **29 Psig** | 10638 | 10401 | 10263 | 10015 | 9656 | 9132 | 8396 | 7377 |
| **44 Psig** | 14169 | 13853 | 13670 | 13467 | 13356 | 13268 | 13084 | 12777 |
| **58 Psig** | 17699 | 17305 | 17076 | 16822 | 16685 | 16598 | 16539 | 16495 |
| **73 Psig** | 21230 | 20757 | 20483 | 20178 | 20013 | 19909 | 19838 | 19786 |
| **87 Psig** | 24761 | 24208 | 23889 | 23534 | 23341 | 23220 | 23137 | 23076 |
| **102 Psig** | 0 | 0 | 27295 | 26890 | 26669 | 26531 | 26436 | 26367 |
| **116 Psig** | 0 | 0 | 0 | 30245 | 29998 | 29842 | 29735 | 29658 |
| **131 Psig** | 0 | 0 | 0 | 0 | 33326 | 33153 | 33035 | 32948 |
| **145 Psig** | 0 | 0 | 0 | 0 | 0 | 36464 | 36334 | 36239 |

*Datos en azul corresponden a toma externa / Values in blue correspond to external impulse

d=0,05 lb/ft$^3$ AC 10

| Ø25 | Pressures (Psig/"WC) vs Flow (SCFH) | | | | | | | |
|---|---|---|---|---|---|---|---|---|
| **Pin / Pout** | **4 Psig** | **6 Psig** | **7 Psig** | **10 Psig** | **13 Psig** | **16 Psig** | **19 Psig** | **22 Psig** |
| **3 Psig** | - | - | - | - | - | - | - | - |
| **4 Psig** | - | - | - | - | - | - | - | - |
| **6 Psig** | 3040 | - | - | - | - | - | - | - |
| **7 Psig** | 4300 | 3084 | - | - | - | - | - | - |
| **11 Psig** | 6450 | 5769 | 4979 | 2334 | - | - | - | - |
| **15 Psig** | 8044 | 7554 | 7041 | 5717 | 3460 | - | - | - |
| **22 Psig** | 10532 | 10228 | 9958 | 9336 | 8474 | 7234 | 5333 | - |
| **29 Psig** | 12641 | 12359 | 12196 | 11901 | 11474 | 10851 | 9977 | 8766 |
| **44 Psig** | 16836 | 16461 | 16243 | 16002 | 15871 | 15766 | 15547 | 15183 |
| **58 Psig** | 21031 | 20562 | 20291 | 19989 | 19826 | 19723 | 19652 | 19601 |
| **73 Psig** | 25227 | 24664 | 24339 | 23977 | 23781 | 23657 | 23573 | 23511 |
| **87 Psig** | 0 | 0 | 28386 | 27964 | 27735 | 27592 | 27493 | 27421 |
| **102 Psig** | 0 | 0 | 0 | 31952 | 31690 | 31526 | 31413 | 31331 |
| **116 Psig** | 0 | 0 | 0 | 0 | 35645 | 35460 | 35334 | 35241 |
| **131 Psig** | 0 | 0 | 0 | 0 | 0 | 39395 | 39254 | 39151 |
| **145 Psig** | 0 | 0 | 0 | 0 | 0 | 0 | 0 | 0 |

*Datos en azul corresponden a toma externa / Values in blue correspond to external impulse

d=0,05 lb/ft$^3$ AC 10

DUNGS®
Combustion Controls

**Tablas de caudal / Flow tables (Imperial units)**

| Ø30 | Pressures (Psig/"WC) vs Flow (SCFH) | | | | | | | |
|---|---|---|---|---|---|---|---|---|
| **Pin / Pout** | **4 Psig** | **6 Psig** | **7 Psig** | **10 Psig** | **13 Psig** | **16 Psig** | **19 Psig** | **22 Psig** |
| **3 Psig** | 0 | 0 | 0 | 0 | 0 | 0 | 0 | 0 |
| **4 Psig** | 0 | 0 | 0 | 0 | 0 | 0 | 0 | 0 |
| **6 Psig** | 3602 | 0 | 0 | 0 | 0 | 0 | 0 | 0 |
| **7 Psig** | 5069 | 3636 | 0 | 0 | 0 | 0 | 0 | 0 |
| **11 Psig** | 7512 | 6719 | 5799 | 2718 | 0 | 0 | 0 | 0 |
| **15 Psig** | 9255 | 8690 | 8101 | 6578 | 3980 | 0 | 0 | 0 |
| **22 Psig** | 11818 | 11476 | 11173 | 10476 | 9509 | 8117 | 5984 | 0 |
| **29 Psig** | 13825 | 13516 | 13338 | 13016 | 12549 | 11867 | 10911 | 9587 |
| **44 Psig** | 17456 | 17066 | 16841 | 16591 | 16455 | 16347 | 16120 | 15742 |
| **58 Psig** | 0 | 0 | 19884 | 19589 | 19428 | 19328 | 19258 | 19208 |
| **73 Psig** | 0 | 0 | 0 | 22133 | 21952 | 21838 | 21760 | 21703 |
| **87 Psig** | 0 | 0 | 0 | 0 | 24026 | 23901 | 23816 | 23753 |
| **102 Psig** | 0 | 0 | 0 | 0 | 0 | 25517 | 25426 | 25359 |
| **116 Psig** | 0 | 0 | 0 | 0 | 0 | 0 | 26590 | 26520 |
| **131 Psig** | 0 | 0 | 0 | 0 | 0 | 0 | 0 | 0 |
| **145 Psig** | 0 | 0 | 0 | 0 | 0 | 0 | 0 | 0 |

*Datos en azul corresponden a toma externa / Values in blue correspond to external impulse

d=0,05 lb/ft$^3$ AC 10

| Ø35 | Pressures (Psig/"WC) vs Flow (SCFH) | | | | | | | |
|---|---|---|---|---|---|---|---|---|
| **Pin / Pout** | **4 Psig** | **6 Psig** | **7 Psig** | **10 Psig** | **13 Psig** | **16 Psig** | **19 Psig** | **22 Psig** |
| **3 Psig** | 0 | 0 | 0 | 0 | 0 | 0 | 0 | 0 |
| **4 Psig** | 0 | 0 | 0 | 0 | 0 | 0 | 0 | 0 |
| **6 Psig** | 3481 | 0 | 0 | 0 | 0 | 0 | 0 | 0 |
| **7 Psig** | 4869 | 3492 | 0 | 0 | 0 | 0 | 0 | 0 |
| **11 Psig** | 7101 | 6351 | 5481 | 2570 | 0 | 0 | 0 | 0 |
| **15 Psig** | 8603 | 8079 | 7530 | 6114 | 3700 | 0 | 0 | 0 |
| **22 Psig** | 10603 | 10296 | 10024 | 9398 | 8531 | 7282 | 5368 | 0 |
| **29 Psig** | 11931 | 11665 | 11511 | 11233 | 10830 | 10242 | 9416 | 8273 |
| **44 Psig** | 0 | 0 | 13290 | 13092 | 12985 | 12899 | 12720 | 12422 |
| **58 Psig** | 0 | 0 | 0 | 13842 | 13729 | 13658 | 13609 | 13573 |
| **73 Psig** | 0 | 0 | 0 | 0 | 13479 | 13409 | 13361 | 13326 |
| **87 Psig** | 0 | 0 | 0 | 0 | 0 | 12172 | 12128 | 12096 |
| **102 Psig** | 0 | 0 | 0 | 0 | 0 | 0 | 9910 | 9884 |
| **116 Psig** | 0 | 0 | 0 | 0 | 0 | 0 | 0 | 0 |
| **131 Psig** | 0 | 0 | 0 | 0 | 0 | 0 | 0 | 0 |
| **145 Psig** | 0 | 0 | 0 | 0 | 0 | 0 | 0 | 0 |

*Datos en azul corresponden a toma externa / Values in blue correspond to external impulse

d=0,05 lb/ft$^3$ AC 10

Plano CAD, no cambiar manualmente!
CAD-Drawing, do not change manually!

This design and/or document is proprietary and protected by copyright.
It may not, without our prior express consent, be copied nor transmitted
to any third party. It must be returned to us upon discharge of the order.

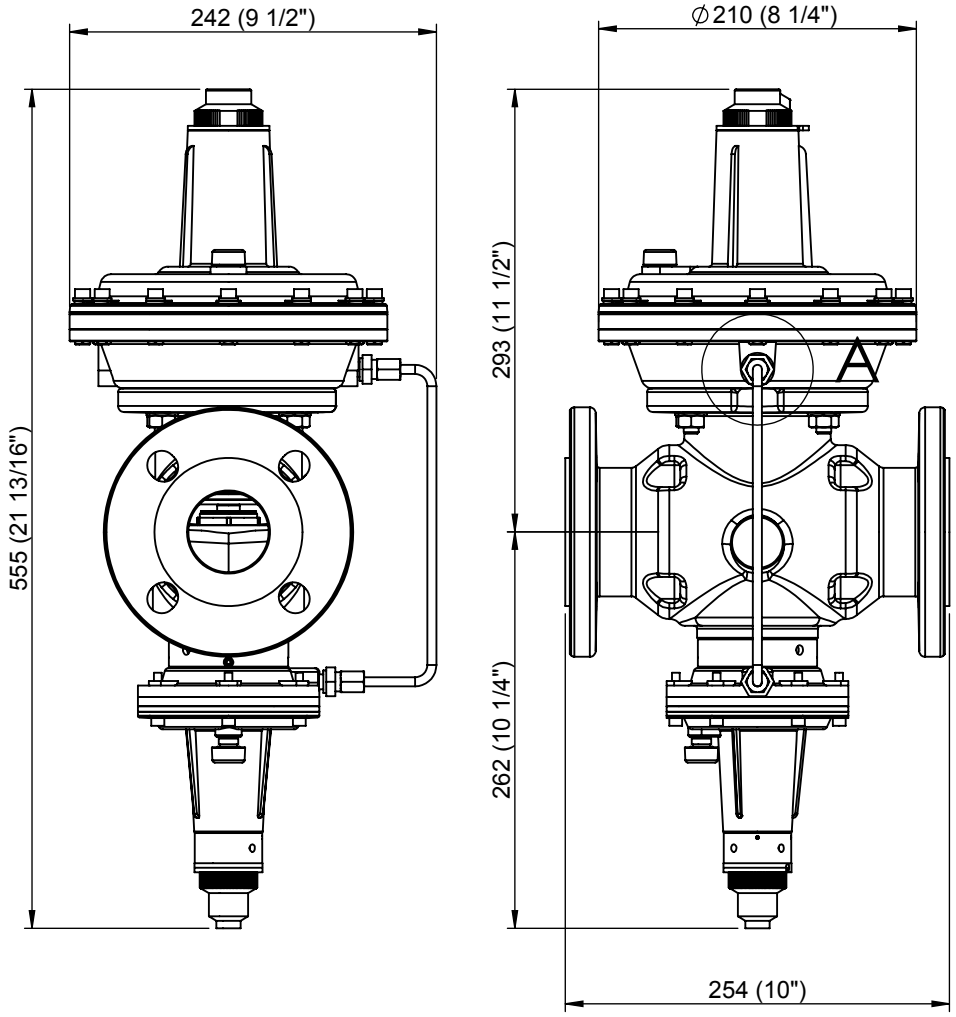


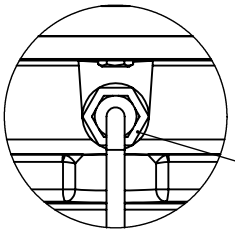

External impulse
connection on request

DETALLE A
ESCALA 2 : 5

3D

| Rev | Descripción Modificación | Fecha | Nom |
|---|---|---|---|
| | | | |

**Karl Dungs S.L.U.**
**Combustion Controls**
Avinguda de Can Roqueta, 15 - Pol. Can Roqueta
E-08202 - Sabadell
Barcelona - ESPAÑA

| | Fecha | Nombre | Firmado |
|---|---|---|---|
| Dibujado | 31/10/2018 | J.Inglés | |
| Verificado | 31/10/2018 | A.Rof | |
| Aprobado | 31/10/2018 | GX | |

Tolerancias según ISO 2768
TOLERANCIAS GENERALES ISO 2768-mK
(MEDIUM) TOLERANCIAS LINEALES
Roscas a 6g/6H y longitudes +1.0/-0

Rz 12.5 ( )

Eliminar rebabas y cantos vivos

Escala: 1:5

Acabado:

Material:

Tratamiento:

Peso: 19275.49 gr.

Descripción:
DIMENSIONS FRM-NOC100050HD

| Código Pieza | Rev. | Formato | Pág. |
|---|---|---|---|
| FRM-NOC100050HD | 0 | A4 | 1 de 1 |

Dimensiones en mm (inch)

Queda prohibida la preproducción total o parcial de este documento
y del contenido del mismo sin la autorización escrita de Karl Dungs S.L.U.
Todos los derechos reservados.

## ESPECIFICACIONES TÉCNICAS / TECHNICAL SPECIFICATION

DUNGS®
Combustion Controls

Regulador de presión con válvula de seguridad, conforme a las normas EN-334 y EN-14382 /
Pressure regulator with safety shut-off valve, in accordance with the standards EN-334 and EN-14382

| | |
|---|---|
| Presión de operación / Operating pressure | Max. 10 Bar / 1000 kPa / 145 Psig |
| Rango de presión de salida FRM / Outlet pressure range FRM | Ver tabla de Selección / See Set point Table |
| Temperatura máxima ambiental / Ambient maximum temperature | 60 ºC / 145ºF |
| Temperatura minima ambiental / Ambient minimum temperature | -20 ºC / -10 ºF |
| Fluido / Flow | Gas Natural, GLP / Natural Gas, LPG |
| Posición de montaje / Mounting Position | 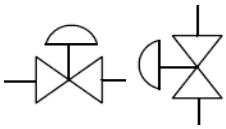 *Puede variar el tarado para presiones inferiores a 300 mbar / for pressures below 300 mbar setpoint can be altered |
| Tipo de Construcción / Construction Type: | DS (De resistencia diferencial) / DS (Diferential strenght) |
| Materiales / Materials — Cuerpo / Body | Hierro fundido / Cast iron EN GJS 500-7 or EN GJS 400-15 |
| Actuador / Actuator | Aluminio / Aluminium |
| Membranas / Membranes | NBR EN549 conform |
| Diametro Nominal / Nominal Diameter | Bridas de conexión PN 25 según EN1092-1<br>Connecting flange PN 25 according to EN1092-1<br>DN 50 |

| Codigo de producto / Product's code | BSP / SAV | BSP | NPT / SAV | NPT |
|---|---|---|---|---|
| | 279084 | 279096 | 280259 | 280271 |

Producto diseñado acorde a las normas EN-334 y EN-14382 / Product designed in accordance to EN-334 and EN-14382
Categoría III (Regulador) y IV (Válvula de seguridad) acorde a PED 2014/68/UE & CRN B51.14 pendiente
Product category III (Regulator) and IV (Safety valve) according to PED 2014/68/UE & CRN B51.14 pending

| Muelle de regulación / Regulation spring | | | | | | | | | | | | | |
|---|---|---|---|---|---|---|---|---|---|---|---|---|---|
| Ø hilo / wire | Rango / Range (min-Max) | | | | | | | | | | | Color/Color | codigo/code |
| 10 | 1000 | 1600 | (mbar) | 100 | 160 | (kPa) | 14,5 | 23,2 | (psig) | | | lila/purple | 286389 |
| 11 | 1500 | 2400 | (mbar) | 150 | 240 | (kPa) | 21,8 | 34,8 | (psig) | | | naranja/orange | 286390 |
| 12 | 3200 | 3600 | (mbar) | 320 | 360 | (kPa) | 46,4 | 52,2 | (psig) | | | rosa/pink | 286393 |
| 13 | 3500 | 4000 | (mbar) | 350 | 400 | (kPa) | 50,8 | 58 | (psig) | | | rojo/red | 286394 |

| Muelle de mínima presión / Under pressure spring (UPSO) | | | | | | | | | | | | | |
|---|---|---|---|---|---|---|---|---|---|---|---|---|---|
| Ø hilo / wire | Rango / Range (min-Max) | | | | | | | | | | | Color/Color | codigo/code |
| 2,5 | 150 | 500 | (mbar) | 15 | 50 | (kPa) | 2,2 | 7,3 | (psig) | | | lila/purple | 270178 |
| 2,8 | 300 | 1000 | (mbar) | 30 | 100 | (kPa) | 4,4 | 14,5 | (psig) | | | naranja/orange | 270179 |
| 3 | 800 | 1400 | (mbar) | 80 | 140 | (kPa) | 11,6 | 20,3 | (psig) | | | plata/silver | 270180 |
| 3,5 | 1200 | 3000 | (mbar) | 120 | 300 | (kPa) | 17,4 | 43,5 | (psig) | | | rosa/pink | 270124 |

| Muelle de máxima presión / Over pressure spring (OPSO) | | | | | | | | | | | | | |
|---|---|---|---|---|---|---|---|---|---|---|---|---|---|
| Ø hilo / wire | Rango / Range (min-Max) | | | | | | | | | | | Color/Color | codigo/code |
| 4,5 | 1300 | 2500 | (mbar) | 130 | 250 | (kPa) | 18,9 | 36,3 | (psig) | | | naranja/orange | 270188 |
| 4,8 | 1800 | 3500 | (mbar) | 180 | 350 | (kPa) | 26,1 | 50,8 | (psig) | | | rosa/pink | 270189 |
| 5 | 2500 | 5000 | (mbar) | 250 | 500 | (kPa) | 36,3 | 72,5 | (psig) | | | blanco/white | 271114 |

| Orificios / Orifices | | | | | | | | | | | | |
|---|---|---|---|---|---|---|---|---|---|---|---|---|
| Medida/size | Ø12 | | Ø16 | | Ø20 | | Ø25 | | Ø30 | | Ø35 | |
| $P_{umax}$* (bar/psig) | 10 | 145 | 10 | 145 | 10 | 145 | 8 | 116 | 8 | 116 | 6 | 87 |

*Máxima presión de entrada / Maximum inlet pressure

Regulador de gas para media presión / Gas regulator for medium pressure
**FRM-NOC 100050UHD / SAV HD**

DUNGS®
Combustion Controls

**Tablas de caudal / Flow tables (SI units)**

| Ø12 | Pressures (Bar) vs Flow ($Nm^3/h$) | | | | | | | |
|---|---|---|---|---|---|---|---|---|
| **Pin / Pout** | **1** | **1,25** | **1,5** | **1,75** | **2** | **2,5** | **3** | **4** |
| **0,2** | - | - | - | - | - | - | - | - |
| **0,3** | - | - | - | - | - | - | - | - |
| **0,4** | - | - | - | - | - | - | - | - |
| **0,5** | - | - | - | - | - | - | - | - |
| **0,75** | - | - | - | - | - | - | - | - |
| **1** | - | - | - | - | - | - | - | - |
| **1,5** | 134 | 107 | - | - | - | - | - | - |
| **2** | 190 | 186 | 167 | 127 | - | - | - | - |
| **3** | 269 | 284 | 289 | 284 | 266 | 203 | - | - |
| **4** | 336 | 357 | 373 | 381 | 376 | 351 | 306 | - |
| **5** | 403 | 429 | 448 | 460 | 460 | 453 | 433 | 343 |
| **6** | 470 | 500 | 522 | 536 | 536 | 536 | 531 | 484 |
| **7** | 537 | 571 | 597 | 613 | 613 | 613 | 613 | 593 |
| **8** | 604 | 643 | 671 | 689 | 689 | 689 | 689 | 685 |
| **9** | 671 | 714 | 746 | 766 | 766 | 766 | 766 | 766 |
| **10** | 738 | 785 | 820 | 842 | 842 | 842 | 842 | 842 |

*Datos en azul corresponden a toma externa / Values in blue correspond to external impulse

d=0,83 $Kg/m^3$ AC 10

| Ø16 | Pressures (Bar) vs Flow ($Nm^3/h$) | | | | | | | |
|---|---|---|---|---|---|---|---|---|
| **Pin / Pout** | **1** | **1,25** | **1,5** | **1,75** | **2** | **2,5** | **3** | **4** |
| **0,2** | - | - | - | - | - | - | - | - |
| **0,3** | - | - | - | - | - | - | - | - |
| **0,4** | - | - | - | - | - | - | - | - |
| **0,5** | - | - | - | - | - | - | - | - |
| **0,75** | - | - | - | - | - | - | - | - |
| **1** | - | - | - | - | - | - | - | - |
| **1,5** | 165 | 131 | - | - | - | - | - | - |
| **2** | 233 | 228 | 205 | 157 | - | - | - | - |
| **3** | 330 | 348 | 354 | 350 | 335 | 265 | - | - |
| **4** | 412 | 438 | 457 | 470 | 474 | 460 | 411 | - |
| **5** | 494 | 525 | 549 | 567 | 581 | 594 | 582 | 475 |
| **6** | 576 | 613 | 640 | 661 | 678 | 702 | 712 | 671 |
| **7** | 658 | 700 | 731 | 755 | 774 | 803 | 823 | 822 |
| **8** | 740 | 788 | 823 | 849 | 871 | 903 | 925 | 949 |
| **9** | 822 | 875 | 914 | 944 | 968 | 1003 | 1028 | 1061 |
| **10** | 0 | 0 | 1005 | 1038 | 1064 | 1103 | 1131 | 1167 |

*Datos en azul corresponden a toma externa / Values in blue correspond to external impulse

d=0,83 $Kg/m^3$ AC 10

DUNGS®
Combustion Controls

**Tablas de caudal / Flow tables (SI units)**

| Ø20 | Pressures (Bar) vs Flow ($Nm^3/h$) | | | | | | | |
|---|---|---|---|---|---|---|---|---|
| **Pin / Pout** | **1** | **1,25** | **1,5** | **1,75** | **2** | **2,5** | **3** | **4** |
| **0,2** | - | - | - | - | - | - | - | - |
| **0,3** | - | - | - | - | - | - | - | - |
| **0,4** | - | - | - | - | - | - | - | - |
| **0,5** | - | - | - | - | - | - | - | - |
| **0,75** | - | - | - | - | - | - | - | - |
| **1** | - | - | - | - | - | - | - | - |
| **1,5** | 206 | 164 | - | - | - | - | - | - |
| **2** | 291 | 284 | 255 | 196 | - | - | - | - |
| **3** | 411 | 434 | 442 | 437 | 419 | 331 | - | - |
| **4** | 514 | 547 | 571 | 587 | 592 | 574 | 513 | - |
| **5** | 616 | 656 | 685 | 707 | 725 | 741 | 726 | 592 |
| **6** | 719 | 765 | 799 | 825 | 846 | 877 | 889 | 838 |
| **7** | 0 | 0 | 913 | 943 | 966 | 1002 | 1027 | 1026 |
| **8** | 0 | 0 | 0 | 1060 | 1087 | 1127 | 1155 | 1185 |
| **9** | 0 | 0 | 0 | 0 | 1207 | 1252 | 1283 | 1324 |
| **10** | 0 | 0 | 0 | 0 | 0 | 1377 | 1411 | 1457 |

*Datos en azul corresponden a toma externa / Values in blue correspond to external impulse

d=0,83 $Kg/m^3$ AC 10

| Ø25 | Pressures (Bar) vs Flow ($Nm^3/h$) | | | | | | | |
|---|---|---|---|---|---|---|---|---|
| **Pin / Pout** | **1** | **1,25** | **1,5** | **1,75** | **2** | **2,5** | **3** | **4** |
| **0,2** | - | - | - | - | - | - | - | - |
| **0,3** | - | - | - | - | - | - | - | - |
| **0,4** | - | - | - | - | - | - | - | - |
| **0,5** | - | - | - | - | - | - | - | - |
| **0,75** | - | - | - | - | - | - | - | - |
| **1** | - | - | - | - | - | - | - | - |
| **1,5** | 247 | 197 | - | - | - | - | - | - |
| **2** | 350 | 342 | 307 | 235 | - | - | - | - |
| **3** | 494 | 522 | 532 | 526 | 503 | 398 | - | - |
| **4** | 618 | 657 | 686 | 705 | 712 | 690 | 617 | - |
| **5** | 741 | 788 | 823 | 850 | 872 | 891 | 873 | 712 |
| **6** | 0 | 0 | 960 | 992 | 1017 | 1054 | 1069 | 1007 |
| **7** | 0 | 0 | 0 | 1133 | 1162 | 1204 | 1234 | 1233 |
| **8** | 0 | 0 | 0 | 0 | 1306 | 1354 | 1388 | 1424 |
| **9** | 0 | 0 | 0 | 0 | 0 | 1505 | 1542 | 1592 |
| **10** | 0 | 0 | 0 | 0 | 0 | 0 | 0 | 0 |

*Datos en azul corresponden a toma externa / Values in blue correspond to external impulse

d=0,83 $Kg/m^3$ AC 10

DUNGS®
Combustion Controls

**Tablas de caudal / Flow tables (SI units)**

| Ø30 | Pressures (Bar) vs Flow ($Nm^3/h$) | | | | | | | |
|---|---|---|---|---|---|---|---|---|
| **Pin / Pout** | **1** | **1,25** | **1,5** | **1,75** | **2** | **2,5** | **3** | **4** |
| **0,2** | - | - | - | - | - | - | - | - |
| **0,3** | - | - | - | - | - | - | - | - |
| **0,4** | - | - | - | - | - | - | - | - |
| **0,5** | - | - | - | - | - | - | - | - |
| **0,75** | - | - | - | - | - | - | - | - |
| **1** | - | - | - | - | - | - | - | - |
| **1,5** | 268 | 213 | - | - | - | - | - | - |
| **2** | 378 | 370 | 332 | 254 | - | - | - | - |
| **3** | 535 | 565 | 575 | 569 | 545 | 431 | - | - |
| **4** | 0 | 0 | 743 | 763 | 770 | 747 | 668 | - |
| **5** | 0 | 0 | 0 | 920 | 943 | 964 | 944 | 770 |
| **6** | 0 | 0 | 0 | 0 | 1100 | 1140 | 1157 | 1090 |
| **7** | 0 | 0 | 0 | 0 | 0 | 1303 | 1336 | 1334 |
| **8** | 0 | 0 | 0 | 0 | 0 | 0 | 1502 | 1541 |
| **9** | 0 | 0 | 0 | 0 | 0 | 0 | 0 | 0 |
| **10** | 0 | 0 | 0 | 0 | 0 | 0 | 0 | 0 |

*Datos en azul corresponden a toma externa / Values in blue correspond to external impulse

d=0,83 $Kg/m^3$ AC 10

| Ø35 | Pressures (Bar) vs Flow ($Nm^3/h$) | | | | | | | |
|---|---|---|---|---|---|---|---|---|
| **Pin / Pout** | **1** | **1,25** | **1,5** | **1,75** | **2** | **2,5** | **3** | **4** |
| **0,2** | - | - | - | - | - | - | - | - |
| **0,3** | - | - | - | - | - | - | - | - |
| **0,4** | - | - | - | - | - | - | - | - |
| **0,5** | - | - | - | - | - | - | - | - |
| **0,75** | - | - | - | - | - | - | - | - |
| **1** | - | - | - | - | - | - | - | - |
| **1,5** | 303 | 242 | - | - | - | - | - | - |
| **2** | 423 | 413 | 371 | 284 | - | - | - | - |
| **3** | 0 | 0 | 628 | 621 | 594 | 470 | - | - |
| **4** | 0 | 0 | 0 | 812 | 820 | 795 | 711 | - |
| **5** | 0 | 0 | 0 | 0 | 978 | 1000 | 980 | 799 |
| **6** | 0 | 0 | 0 | 0 | 0 | 1152 | 1169 | 1101 |
| **7** | 0 | 0 | 0 | 0 | 0 | 0 | 1313 | 1312 |
| **8** | 0 | 0 | 0 | 0 | 0 | 0 | 0 | 0 |
| **9** | 0 | 0 | 0 | 0 | 0 | 0 | 0 | 0 |
| **10** | 0 | 0 | 0 | 0 | 0 | 0 | 0 | 0 |

*Datos en azul corresponden a toma externa / Values in blue correspond to external impulse

d=0,83 $Kg/m^3$ AC 10

DUNGS®
Combustion Controls

**Tablas de caudal / Flow tables (Imperial units)**

| Ø12 | Pressures (Psig/"WC) vs Flow (SCFH) | | | | | | | |
|---|---|---|---|---|---|---|---|---|
| **Pin / Pout** | **15 Psig** | **18 Psig** | **22 Psig** | **25 Psig** | **29 Psig** | **36 Psig** | **44 Psig** | **58 Psig** |
| **3 Psig** | - | - | - | - | - | - | - | - |
| **4 Psig** | - | - | - | - | - | - | - | - |
| **6 Psig** | - | - | - | - | - | - | - | - |
| **7 Psig** | - | - | - | - | - | - | - | - |
| **11 Psig** | - | - | - | - | - | - | - | - |
| **15 Psig** | - | - | - | - | - | - | - | - |
| **22 Psig** | 4748 | 3787 | - | - | - | - | - | - |
| **29 Psig** | 6715 | 6560 | 5895 | 4490 | - | - | - | - |
| **44 Psig** | 9497 | 10020 | 10210 | 10040 | 9378 | 7160 | - | - |
| **58 Psig** | 11864 | 12621 | 13182 | 13470 | 13262 | 12402 | 10823 | - |
| **73 Psig** | 14230 | 15138 | 15811 | 16243 | 16243 | 16011 | 15306 | 12096 |
| **87 Psig** | 16597 | 17656 | 18441 | 18944 | 18944 | 18944 | 18745 | 17107 |
| **102 Psig** | 18963 | 20174 | 21070 | 21645 | 21645 | 21645 | 21645 | 20951 |
| **116 Psig** | 21330 | 22691 | 23700 | 24347 | 24347 | 24347 | 24347 | 24192 |
| **131 Psig** | 23696 | 25209 | 26329 | 27048 | 27048 | 27048 | 27048 | 27048 |
| **145 Psig** | 26063 | 27726 | 28959 | 29749 | 29749 | 29749 | 29749 | 29749 |

*Datos en azul corresponden a toma externa / Values in blue correspond to external impulse

d=0,05 lb/ft$^3$ AC 10

| Ø16 | Pressures (Psig/"WC) vs Flow (SCFH) | | | | | | | |
|---|---|---|---|---|---|---|---|---|
| **Pin / Pout** | **15 Psig** | **18 Psig** | **22 Psig** | **25 Psig** | **29 Psig** | **36 Psig** | **44 Psig** | **58 Psig** |
| **3 Psig** | - | - | - | - | - | - | - | - |
| **4 Psig** | - | - | - | - | - | - | - | - |
| **6 Psig** | - | - | - | - | - | - | - | - |
| **7 Psig** | - | - | - | - | - | - | - | - |
| **11 Psig** | - | - | - | - | - | - | - | - |
| **15 Psig** | - | - | - | - | - | - | - | - |
| **22 Psig** | 5819 | 4641 | - | - | - | - | - | - |
| **29 Psig** | 8230 | 8039 | 7224 | 5532 | - | - | - | - |
| **44 Psig** | 11638 | 12280 | 12513 | 12370 | 11845 | 9375 | - | - |
| **58 Psig** | 14539 | 15467 | 16154 | 16596 | 16751 | 16238 | 14524 | - |
| **73 Psig** | 17439 | 18552 | 19376 | 20012 | 20516 | 20963 | 20540 | 16757 |
| **87 Psig** | 20339 | 21637 | 22599 | 23340 | 23928 | 24803 | 25157 | 23698 |
| **102 Psig** | 23239 | 24723 | 25821 | 26668 | 27340 | 28340 | 29049 | 29024 |
| **116 Psig** | 26139 | 27808 | 29044 | 29996 | 30752 | 31877 | 32674 | 33514 |
| **131 Psig** | 29040 | 30893 | 32266 | 33324 | 34164 | 35414 | 36299 | 37470 |
| **145 Psig** | 0 | 0 | 35489 | 36652 | 37576 | 38951 | 39924 | 41212 |

*Datos en azul corresponden a toma externa / Values in blue correspond to external impulse

d=0,05 lb/ft$^3$ AC 10

DUNGS®
Combustion Controls

**Tablas de caudal / Flow tables (Imperial units)**

| Ø20 | Pressures (Psig/"WC) vs Flow (SCFH) | | | | | | | |
|---|---|---|---|---|---|---|---|---|
| **Pin / Pout** | **15 Psig** | **18 Psig** | **22 Psig** | **25 Psig** | **29 Psig** | **36 Psig** | **44 Psig** | **58 Psig** |
| **3 Psig** | - | - | - | - | - | - | - | - |
| **4 Psig** | - | - | - | - | - | - | - | - |
| **6 Psig** | - | - | - | - | - | - | - | - |
| **7 Psig** | - | - | - | - | - | - | - | - |
| **11 Psig** | - | - | - | - | - | - | - | - |
| **15 Psig** | - | - | - | - | - | - | - | - |
| **22 Psig** | 7262 | 5792 | - | - | - | - | - | - |
| **29 Psig** | 10271 | 10033 | 9016 | 6904 | - | - | - | - |
| **44 Psig** | 14525 | 15325 | 15616 | 15438 | 14783 | 11700 | - | - |
| **58 Psig** | 18144 | 19302 | 20160 | 20712 | 20906 | 20265 | 18126 | - |
| **73 Psig** | 21764 | 23153 | 24182 | 24975 | 25604 | 26161 | 25635 | 20913 |
| **87 Psig** | 25383 | 27003 | 28203 | 29128 | 29862 | 30955 | 31396 | 29575 |
| **102 Psig** | 0 | 0 | 32225 | 33281 | 34120 | 35369 | 36253 | 36222 |
| **116 Psig** | 0 | 0 | 0 | 37435 | 38379 | 39783 | 40777 | 41826 |
| **131 Psig** | 0 | 0 | 0 | 0 | 42637 | 44196 | 45301 | 46762 |
| **145 Psig** | 0 | 0 | 0 | 0 | 0 | 48610 | 49825 | 51433 |

*Datos en azul corresponden a toma externa / Values in blue correspond to external impulse

d=0,05 lb/ft$^3$ AC 10

| Ø25 | Pressures (Psig/"WC) vs Flow (SCFH) | | | | | | | |
|---|---|---|---|---|---|---|---|---|
| **Pin / Pout** | **15 Psig** | **18 Psig** | **22 Psig** | **25 Psig** | **29 Psig** | **36 Psig** | **44 Psig** | **58 Psig** |
| **3 Psig** | - | - | - | - | - | - | - | - |
| **4 Psig** | - | - | - | - | - | - | - | - |
| **6 Psig** | - | - | - | - | - | - | - | - |
| **7 Psig** | - | - | - | - | - | - | - | - |
| **11 Psig** | - | - | - | - | - | - | - | - |
| **15 Psig** | - | - | - | - | - | - | - | - |
| **22 Psig** | 8730 | 6963 | - | - | - | - | - | - |
| **29 Psig** | 12346 | 12060 | 10838 | 8299 | - | - | - | - |
| **44 Psig** | 17460 | 18422 | 18771 | 18557 | 17769 | 14064 | - | - |
| **58 Psig** | 21810 | 23202 | 24233 | 24897 | 25130 | 24359 | 21789 | - |
| **73 Psig** | 26161 | 27831 | 29068 | 30021 | 30777 | 31447 | 30814 | 25138 |
| **87 Psig** | 0 | 0 | 33902 | 35013 | 35896 | 37209 | 37739 | 35551 |
| **102 Psig** | 0 | 0 | 0 | 40006 | 41014 | 42515 | 43578 | 43541 |
| **116 Psig** | 0 | 0 | 0 | 0 | 46133 | 47821 | 49016 | 50276 |
| **131 Psig** | 0 | 0 | 0 | 0 | 0 | 53126 | 54454 | 56211 |
| **145 Psig** | 0 | 0 | 0 | 0 | 0 | 0 | 0 | 0 |

*Datos en azul corresponden a toma externa / Values in blue correspond to external impulse

d=0,05 lb/ft$^3$ AC 10

DUNGS®
Combustion Controls

**Tablas de caudal / Flow tables (Imperial units)**

| Ø30 | Pressures (Psig/"WC) vs Flow (SCFH) | | | | | | | |
|---|---|---|---|---|---|---|---|---|
| **Pin / Pout** | **15 Psig** | **18 Psig** | **22 Psig** | **25 Psig** | **29 Psig** | **36 Psig** | **44 Psig** | **58 Psig** |
| **3 Psig** | - | - | - | - | - | - | - | - |
| **4 Psig** | - | - | - | - | - | - | - | - |
| **6 Psig** | - | - | - | - | - | - | - | - |
| **7 Psig** | - | - | - | - | - | - | - | - |
| **11 Psig** | - | - | - | - | - | - | - | - |
| **15 Psig** | - | - | - | - | - | - | - | - |
| **22 Psig** | 9447 | 7535 | - | - | - | - | - | - |
| **29 Psig** | 13360 | 13051 | 11728 | 8981 | - | - | - | - |
| **44 Psig** | 18895 | 19936 | 20314 | 20082 | 19230 | 15220 | - | - |
| **58 Psig** | 0 | 0 | 26236 | 26942 | 27189 | 26361 | 23580 | - |
| **73 Psig** | 0 | 0 | 0 | 32486 | 33298 | 34032 | 33347 | 27205 |
| **87 Psig** | 0 | 0 | 0 | 0 | 38846 | 40267 | 40841 | 38473 |
| **102 Psig** | 0 | 0 | 0 | 0 | 0 | 46009 | 47160 | 47120 |
| **116 Psig** | 0 | 0 | 0 | 0 | 0 | 0 | 53045 | 54409 |
| **131 Psig** | 0 | 0 | 0 | 0 | 0 | 0 | 0 | 0 |
| **145 Psig** | 0 | 0 | 0 | 0 | 0 | 0 | 0 | 0 |

*Datos en azul corresponden a toma externa / Values in blue correspond to external impulse

d=0,05 lb/ft$^3$ AC 10

| Ø35 | Pressures (Psig/"WC) vs Flow (SCFH) | | | | | | | |
|---|---|---|---|---|---|---|---|---|
| **Pin / Pout** | **15 Psig** | **18 Psig** | **22 Psig** | **25 Psig** | **29 Psig** | **36 Psig** | **44 Psig** | **58 Psig** |
| **3 Psig** | - | - | - | - | - | - | - | - |
| **4 Psig** | - | - | - | - | - | - | - | - |
| **6 Psig** | - | - | - | - | - | - | - | - |
| **7 Psig** | - | - | - | - | - | - | - | - |
| **11 Psig** | - | - | - | - | - | - | - | - |
| **15 Psig** | - | - | - | - | - | - | - | - |
| **22 Psig** | 10694 | 8529 | - | - | - | - | - | - |
| **29 Psig** | 14943 | 14597 | 13118 | 10045 | - | - | - | - |
| **44 Psig** | 0 | 0 | 22175 | 21928 | 20975 | 16596 | - | - |
| **58 Psig** | 0 | 0 | 0 | 28672 | 28955 | 28072 | 25106 | - |
| **73 Psig** | 0 | 0 | 0 | 0 | 34534 | 35311 | 34605 | 28213 |
| **87 Psig** | 0 | 0 | 0 | 0 | 0 | 40683 | 41263 | 38870 |
| **102 Psig** | 0 | 0 | 0 | 0 | 0 | 0 | 46372 | 46332 |
| **116 Psig** | 0 | 0 | 0 | 0 | 0 | 0 | 0 | 0 |
| **131 Psig** | 0 | 0 | 0 | 0 | 0 | 0 | 0 | 0 |
| **145 Psig** | 0 | 0 | 0 | 0 | 0 | 0 | 0 | 0 |

*Datos en azul corresponden a toma externa / Values in blue correspond to external impulse

d=0,05 lb/ft$^3$ AC 10

Plano CAD, no cambiar manualmente!
CAD-Drawing, do not change manually!

This design and/or document is proprietary and protected by copyright.
It may not, without our prior express consent, be copied nor transmitted
to any third party. It must be returned to us upon discharge of the order.

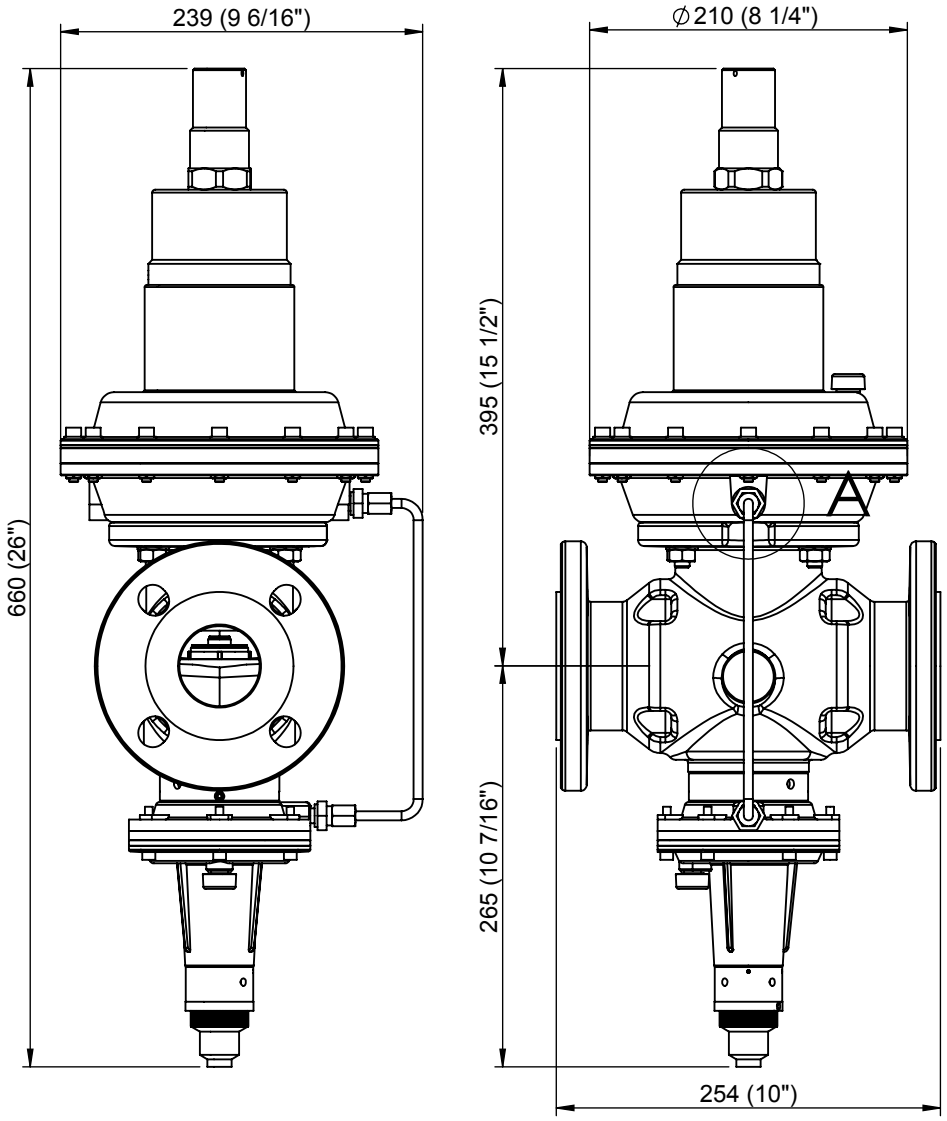


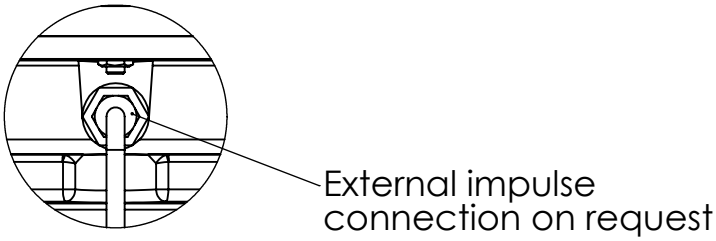


DETALLE A
ESCALA 2 : 5

3D

| Rev | Descripción Modificación | Fecha | Nom |
|---|---|---|---|
| | | | |
| | | | |
| | | | |
| | | | |
| | | | |
| | | | |
| | | | |
| | | | |
| | | | |
| | | | |
| | | | |
| | | | |

**Karl Dungs S.L.U.**
**Combustion Controls**
Avinguda de Can Roqueta, 15 - Pol. Can Roqueta
E-08202 - Sabadell
Barcelona - ESPAÑA

| | Fecha | Nombre | Firmado |
|---|---|---|---|
| Dibujado | 31/10/2018 | A. Rof | |
| Verificado | 31/10/2018 | J. Inglés | |
| Aprobado | 31/10/2018 | GX | |

Tolerancias según ISO 2768
TOLERANCIAS GENERALES ISO 2768-mK
(MEDIUM) TOLERANCIAS LINEALES
Roscas a 6g/6H y longitudes +1.0/-0

Rz 12.5 ( )

Eliminar rebabas y cantos vivos

Escala: 1:5

Material:

Acabado:

Tratamiento:

Peso: 23470.81 gr.

Descripción:
DIMENSIONS FRM-NOC100050UHD

| Código Pieza | Rev. | Formato | Pág. |
|---|---|---|---|
| FRM-NOC100050UHD | 0 | A4 | 1 de 1 |

Dimensiones en mm (inch)

Queda prohibida la preproducción total o parcial de este documento
y del contenido del mismo sin la autorización escrita de Karl Dungs S.L.U.
Todos los derechos reservados.