SIEMENS

Product data sheet 3SB3612-6BA50

22MM METAL ROUND COMPLETE UNIT COMBINATION: INDICATOR LIGHT WITH CONCENTRIC RINGS ILLUMINATED WITH LAMP HOLDER BA 9S WITH LAMP 130V AC/DC SCREW TERMINAL OPERATIONAL VOLTAGE 220/230V AC WITH HOLDER BLUE

Enclosure:		
Material / of the enclosure		metal
Form / of the enclosure front		round

Actuato/ signaling device:		
Design of the product		Complete unit round
Design of the operating mechanism		indicator light
Type of unlocking device		without
Color / of the activation element		Blue
Shape / of the activation element		Concentric rings
Number of switching positions		0
Product component / front ring		No

Holder:		
Material / of the holder		Metal

Contact block/ lampholder:		
Design of the electrical connection		screw-type terminals
Number of switching elements		0
Number of NC contacts / for auxiliary contacts		0
Number of NO contacts / for auxiliary contacts		0

subject to modifications
© Copyright Siemens AG 2014

Number of changeover contacts / for auxiliary contacts		0
Product function / positive opening		No
Number of lampholders		1
Execution of the mounting		BA 9s, with lamp
Product component / fluorescent materials		Yes
Product extension / optional / fluorescent materials		Yes

Accessories:

Product component / holder for 3 switching elements		No

General technical details:

Type of voltage / of the supply voltage / of light source		AC/DC
Supply voltage / 1 / of the fluorescent material		
• at 60 Hz / for AC / rated value	V	130
• at 50 Hz / for AC / rated value	V	130
• for DC / rated value	V	130
Voltage type / of operating voltage		AC
Operating voltage		
• rated value	V	220 … 230
Resistance against shock		
• for devices with incandescent lamp / according to IEC 60068-2-27		<= 30g
Resistance against vibration / according to IEC 60068-2-6		20 ... 200 Hz: 5g
Reference code		
• according to DIN EN 61346-2		P
• according to DIN 40719 extended according to IEC 204-2 / according to IEC 750		H
Tightening torque / of the screws in the bracket / maximum	N·m	1
• during operating	°C	-25 … +60
• during storage	°C	-40 … +80
Protection class IP		IP67
climatic class / during the operating phase / according to EN 60721		3K6
Mounting type		front mounting
Shape / of the installation hole		round
Installation width	mm	28
Mounting diameter	mm	22
Mounting height	mm	11
Mounting depth	mm	49

Certificates/ approvals:

© Copyright Siemens AG 2014

General Product Approval				Declaration of Conformity	Test Certificates
CCC	CSA		UL	EG-Konf.	Special Test Certificate
Shipping Approval					
ABS	DNV	LRS	PRS	RINA	
other					
Confirmation	other	Environmental Confirmations			

Further information:

Information- and Downloadcenter (Catalogs, Brochures,…)
http://www.siemens.com/industrial-controls/catalogs

Industry Mall (Online ordering system)
http://www.siemens.com/industrial-controls/mall

Cax online generator
http://www.siemens.com/cax

Service&Support (Manuals, Certificates, Characteristics, FAQs,...)
http://support.automation.siemens.com/WW/view/en/3SB3612-6BA50/all

Image database (product images, 2D dimension drawings, 3D models, device circuit diagrams, ...)
http://www.automation.siemens.com/bilddb/cax_en.aspx?mlfb=3SB3612-6BA50

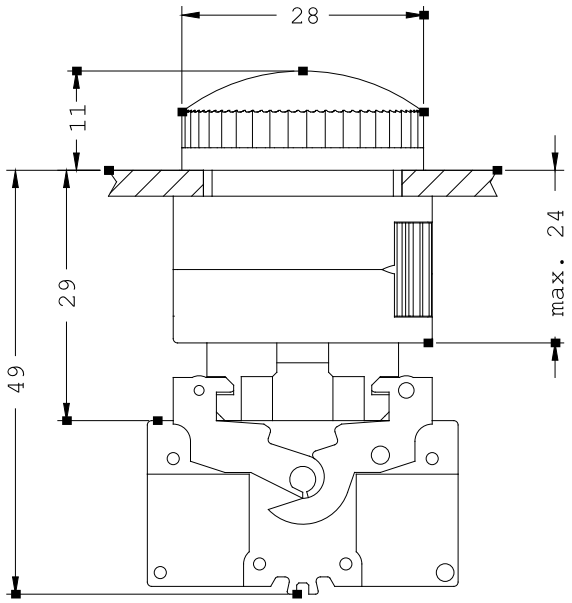

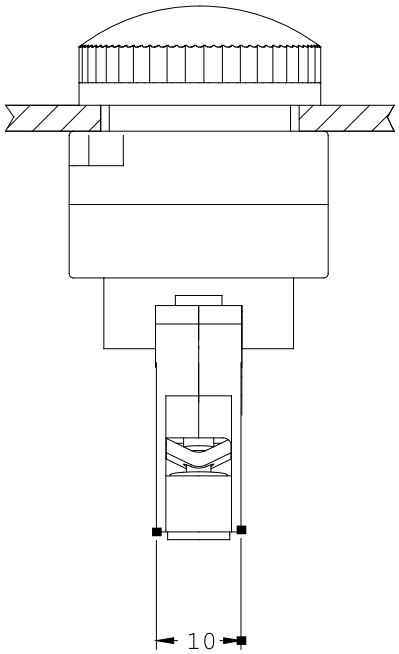

last change: Jul 7, 2014

© Copyright Siemens AG 2014