MACX PL-RPSSI-2I-SP - Repeater power supply

2904962

https://www.phoenixcontact.com/gb/products/2904962

Please be informed that the data shown in this PDF document is generated from our online catalog. Please find the complete data in the user documentation. Our general terms of use for downloads are valid.

Measuring transducer repeater power supply and input signal conditioner, HART-transparent. Transmits supplied or active 4…20 mA electrically isolated signals from the field to two loads. 4-way electrical isolation, PLd. Replacement part: 2924838 MACX MCR-SL-RPSSI-2I-SP.

Commercial data

Item number	2904962
Packing unit	1 pc
Minimum order quantity	1 pc
Product key	DK1111
GTIN	4046356904544
Weight per piece (including packing)	196.08 g
Weight per piece (excluding packing)	196.08 g
Country of origin	DE

Technical data

Product properties

Product type	Repeater power supply
No. of channels	1
Type	Signal conditioners with SIL and PL Functional Safety

Electrical properties

Electrical isolation between input and output	yes
Step response (10-90%)	1.3 ms (for jump 4 mA ... 20 mA, typical)
Maximum temperature coefficient	< 0.01 %/K
Maximum transmission error	< 0.1 % (of final value)
Transmission error, typical	< 0.05 % (of final value)

Electrical isolation Input/output/power supply

Rated insulation voltage	300 V_{rms}
Test voltage	2.5 kV AC (50 Hz, 60 s)
Overvoltage category	II
Degree of pollution	2
Insulation	Safe isolation in accordance with IEC/EN 61010-1

Electrical isolation Output 1/output 2

Test voltage	1.5 kV AC (50 Hz, 60 s)

Supply

Designation	Repeater power supply operation
Nominal supply voltage	24 V DC
Supply voltage range	19.2 V DC ... 30 V DC (24 V DC, -20 % ... +25 %)
Max. current consumption	< 75 mA (24 V DC)
Power dissipation	< 1.45 W (24 V DC/20 mA)

Supply

Designation	Signal conditioner operation
Nominal supply voltage range	19.2 V DC ... 30 V DC (24 V DC, -20 % ... +25 %)
Max. current consumption	< 46 mA (24 V DC / 20 mA)
Power dissipation	< 1.2 W (24 V DC/20 mA)

Input data

Signal: Repeater power supply operation

Description of the input	Repeater power supply operation
Number of inputs	1
Current input signal	4 mA ... 20 mA
Transmitter supply voltage	> 21.5 V (20 mA)
	> 21 V (23 mA)

Signal: Signal conditioner operation

Description of the input	Signal conditioner operation
Current input signal	4 mA ... 20 mA
Voltage drop	< 3.9 V (in input isolating amplifier operation)

Output data

Signal: Repeater power supply operation

Output description	Repeater power supply operation
Number of outputs	2
Current output signal	4 mA ... 20 mA (active)
Load/output load current output	< 450 Ω (20 mA)
	< 380 Ω (23 mA)
Output ripple	< 20 mV_{rms}
Output behavior in the event of an error	0 mA (Cable break in the input)
	≥ 23 mA (Cable short-circuit in the input)

Signal: Signal conditioner operation

Output description	Signal conditioner operation
Current output signal	4 mA ... 20 mA (active)
Load/output load current output	< 450 Ω (20 mA)
	< 380 Ω (23 mA)
Output ripple	< 20 mV_{rms}
Output behavior in the event of an error	0 mA (Cable break in the input)
	≥ 23 mA (Cable short-circuit in the input)

Connection data

Connection method	Push-in connection
Stripping length	8 mm
Conductor cross section rigid	0.2 mm² ... 1.5 mm²
Conductor cross section flexible	0.2 mm² ... 1.5 mm²
Conductor cross section AWG	24 ... 16

Interfaces

Data communication (bypass)

HART function	Yes
Protocols supported	HART-transparent

Signaling

Status display	Green LED (PWR supply voltage)

Dimensions

Width	12.5 mm
Height	99 mm
Depth	114.5 mm

Material specifications

Color	yellow (RAL 1018)
Flammability rating according to UL 94	V0 (Housing)
Housing material	PA 6.6-FR

Environmental and real-life conditions

Ambient conditions

Degree of protection	IP20 (not assessed by UL)
Ambient temperature (operation)	-20 °C ... 60 °C (Any mounting position)
Ambient temperature (storage/transport)	-40 °C ... 80 °C
Altitude	≤ 2000 m
Permissible humidity (operation)	10 % ... 95 % (non-condensing)

Approvals

CE

Certificate	CE-compliant
Note	and EN 61326

ATEX

Identification	Ⓔx II 3 G Ex nA IIC T4 Gc X

UL, USA/Canada

Identification	UL 61010 Listed
	Class I, Div. 2, Groups A, B, C, D T4
	Class I, Zone 2, Group IIC T4

Shipbuilding approval

Identification	C, EMC2
Certificate	DNV GL 11 564-14HH

Safety Integrity Level (SIL, IEC 61508)

Identification	2

Performance Level (ISO 13849)

Identification	d

EMC data

Electromagnetic compatibility	Conformance with EMC directive
Noise immunity	EN 61000-6-2
Note	When being exposed to interference, there may be minimal deviations.

Electromagnetic HF field

Designation	Electromagnetic RF field
Standards/regulations	EN 61000-4-3
Typical deviation from the measuring range final value	3 %

Fast transients (burst)

Designation	Fast transients (burst)
Standards/regulations	EN 61000-4-4
Typical deviation from the measuring range final value	3 %

Conducted interference

Designation	Conducted interferences
Standards/regulations	EN 61000-4-6
Typical deviation from the measuring range final value	3 %

Mounting

Mounting type	DIN rail mounting

Drawings

Block diagram

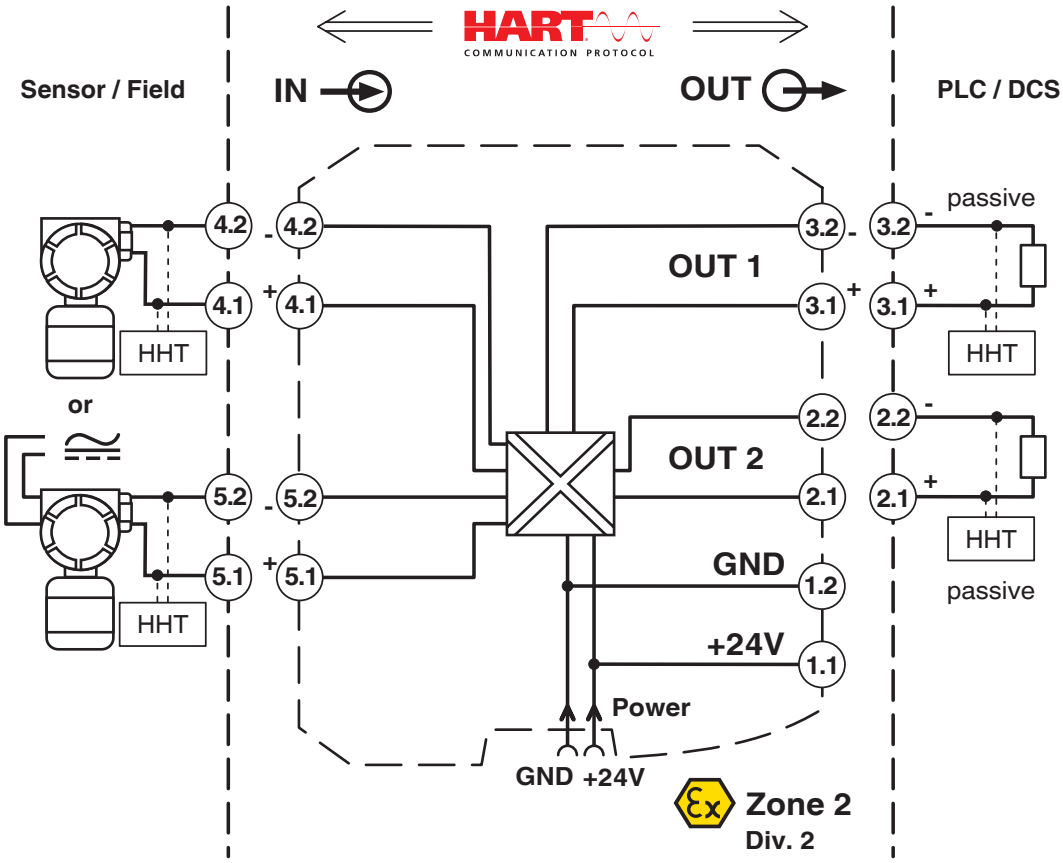

Environmental product compliance

China RoHS

Environment friendly use period (EFUP)	EFUP-50
	An article-related China RoHS declaration table can be found in the download area for the respective article under "Manufacturer declaration". For all articles with EFUP-E, no China RoHS declaration table issued and required.

EU REACH SVHC

REACH candidate substance (CAS No.)	No substance above 0.1 wt%

Phoenix Contact 2025 © - all rights reserved
https://www.phoenixcontact.com

PHOENIX CONTACT Ltd
Halesfield 13, Telford
Shropshire, TF7 4PG
01952 681700
info@phoenixcontact.co.uk