Product Data Sheet

GW62366

IEC 309 BTS Range

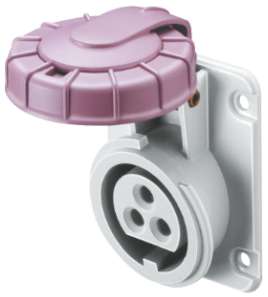

A range of trailing and fixed plugs and socket-outlets for industrial use, complying with the dimensional and performance standards unified at International level (IEC 60309) and assimilated by the European Standards (EN 60309) and Italian Standards (CEI 23-12). Socket-outlets and plugs with a rated current of 63 and 125A are equipped with an extra pilot contact (CP) for creating an electric interlock. The range is completed with 90° fixed plugs and 10° and 90° fixed socket-outlets. Sleeves and pins are obtained from solid brass bar, type Pt. CuZn40Pb2 (Cu 58%, Zn 40%, Pb 2%); anti-loosening terminals with unlosable screws, and built-in cable clamp with anti-abrasion cable gland.

Colour	Violet	Rated current (A)	16
IP degree	IP67	No. of poles	3P
Mechanical resistance	IK08	Reference h	-
Flange dimensions (mm)	85x75	Type	10° angled flush-mounting socket-outlet
Rated voltage	20-25 V	Frequency	50 - 60 Hz
Terminal tightening capacity	1-2.5mm² flexible cables - 1.5-4mm² rigid cables	Operating temperature	-25 +40 °C
Type of wiring	With screw	Electrocod	2211
Glow wire test	850 °C (active parts) - 650 °C (passive parts)	Total number of operations	> 5000
Permissible overload	22 A	Breaking capacity at 1.1 Un	20 A
Insulation resistance	> 10 MΩ	Thermo-pressure with ball	125 °C (active parts) - 80 °C (passive parts)

BEHAVIOUR WITH CHEMICAL AND ATMOSPHERIC AGENTS

Saline solution	Acids		Bases		Solvents				Mineral oil	UV rays
	Concentrated	Diluited	Concentrated	Diluited	Hexane	Benzol	Acetone	Alcohol		
Resistant	Not resistant	Limited resistance	Limited resistance	Resistant	Resistant	Resistant	Resistant	Resistente	Resistant	Resistant

DIMENSIONAL

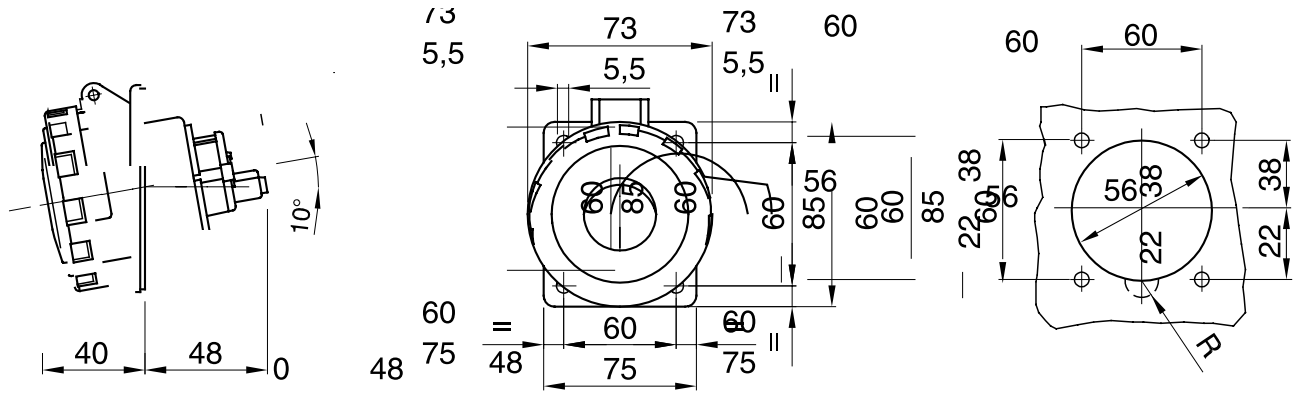

TECHNICAL SYMBOLOGY

IP	IK	INSTALLATION		GWT	
IP67	IK08	-25 +40 °C	With screw	850 °C (active parts) - 650 °C (passive parts)	125 °C (active parts) - 80 °C (passive parts)

STANDARDS/APPROVALS

GEWISS S.p.A. Via A. Volta, 1
24069 Cenate Sotto - Bergamo - Italy
tel. +39 035 94 61 11 fax +39 035 94 69 09

www.gewiss.com
sat@gewiss.com

Last update 17/09/2025

Data, measures, designs and pictures are shown only as informative purposes, and could be changed without previous notice