RU1202

Incremental encoder with solid shaft

RU-5000-I05/P2E

Status Archive

/RUP500 + E12460 + E12402

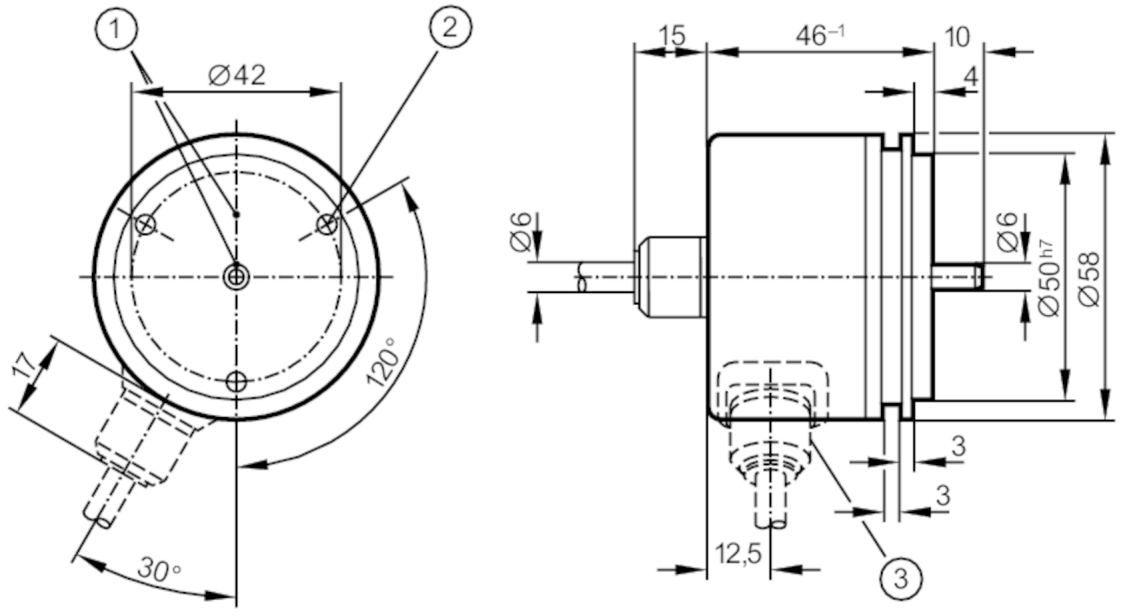

1 reference mark
2 M4 Depth 5 mm

Application		
Function principle		incremental
Electrical data		
Operating voltage tolerance	[%]	10
Operating voltage	[V]	5 DC
Current consumption	[mA]	150
Outputs		
Electrical design		TTL
Max. current load per output	[mA]	20
Switching frequency	[kHz]	300
Phase difference A und B	[°]	90
Measuring/setting range		
Resolution		5000 resolution
Operating conditions		
Ambient temperature	[°C]	-30...100
Note on ambient temperature		for firmly laid cable: -30 °C
Storage temperature	[°C]	-30...100
Max. relative air humidity	[%]	98
Protection		IP 66

RU1202

Incremental encoder with solid shaft

RU-5000-I05/P2E

Tests / approvals			
Shock resistance			100 g (6 ms)
Vibration resistance			10 g (55...2000 Hz)
MTTF	[years]	190	

Mechanical data		
Weight	[g]	551.6
Dimensions	[mm]	Ø 58 / L = 46
Materials		aluminium
Max. revolution, mechanical	[U/min]	12000
Max. starting torque	[Nm]	1
Reference temperature torque	[°C]	20
Shaft design		solid shaft
Shaft diameter	[mm]	6
Shaft material		steel (1.4104)
Max. shaft load axial (at the shaft end)	[N]	10
Max. shaft load radial (at the shaft end)	[N]	20
Fixing flange		synchro-flange

Remarks	
Notes	discontinued article

Electrical connection

Cable: 2 m, PUR; axial

pink (1)	B inverted
blue (2)	+5V sensor
red (3)	0 index
black (4)	0 index inverted
brown (5)	A
green (6)	A inverted
lilac (7)	failure inverted
grey (8)	B
pin 9	n.c.
white/green (10)	0V (Un)
white (11)	0V sensor
brown/green (12)	+5V (Up)
screen	housing

Connector: 1 x M23 (ifm 1001.1)

RU1202

Incremental encoder with solid shaft

RU-5000-I05/P2E

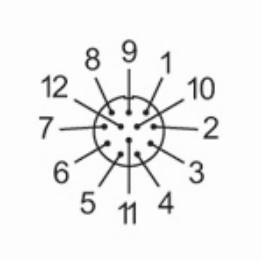

Diagrams and graphs

Pulse diagram

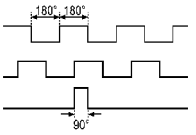

Output A

Output B

0 index

Status Archive

/RUP500 + E12460 + E12402