Product data sheet

DOS-0607W000IA3KU0

SICK
Sensor Intelligence.

Ordering information

Type	Part no.
DOS-0607W000IA3KU0	6007363

Other models and accessories → www.sick.com/

Detailed technical data

Technical specifications

Accessory group	Plug connectors and cables
Accessory family	Field-attachable connectors
Connection type head A	Female connector, M26, 7-pin, angled
Connection type	Screw contacts
Connector color	Gray
Shielding	Unshielded
Permitted cable diameter	7 mm ... 9 mm
Permitted cross-section	0.5 mm² ... 1.5 mm²
Reference voltage	≤ 50 V
Rated impulse voltage	4 V
Current loading	10 A
Enclosure rating	IP65
Ambient operating temperature	
Head	–40 °C ... +90 °C

Dimensional drawing (Dimensions in mm (inch))

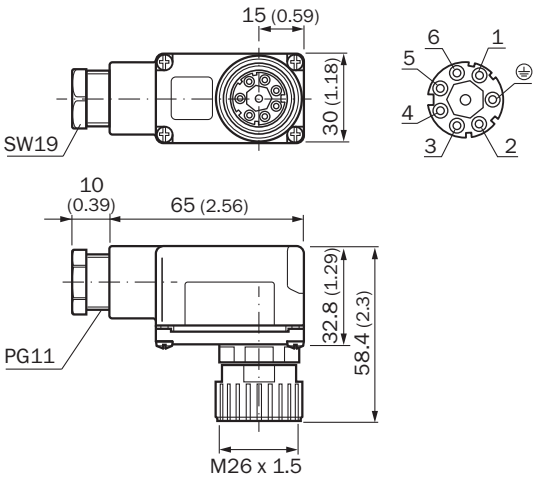

SICK AT A GLANCE

SICK is one of the leading manufacturers of intelligent sensors and sensor solutions for industrial applications. A unique range of products and services creates the perfect basis for controlling processes securely and efficiently, protecting individuals from accidents and preventing damage to the environment.

We have extensive experience in a wide range of industries and understand their processes and requirements. With intelligent sensors, we can deliver exactly what our customers need. In application centers in Europe, Asia and North America, system solutions are tested and optimized in accordance with customer specifications. All this makes us a reliable supplier and development partner.

Comprehensive services complete our offering: SICK LifeTime Services provide support throughout the machine life cycle and ensure safety and productivity.

For us, that is "Sensor Intelligence."

WORLDWIDE PRESENCE:

Contacts and other locations –www.sick.com

SICK
Sensor Intelligence.