Product data sheet

DOL-1204-G25MRN

SICK
Sensor Intelligence.

Ordering information

Type	Part no.
DOL-1204-G25MRN	6058480

Other models and accessories → www.sick.com/

Detailed technical data

Technical specifications

Accessory group	Plug connectors and cables
Accessory family	Connecting cables
Connection type head A	Female connector, M12, 4-pin, straight
Connection type head B	Flying leads
Connection type	Flying leads
Connector material	PP
Connector color	Gray
Locking nut material	Stainless steel (V4A/1.4404)
Tightening torque	1 Nm
Width across flats	14
Cable	25 m, 4-wire, PP
Jacket material	PP [1]
Jacket color	Gray
Cable diameter	4.6 mm
Conductor cross-section	0.34 mm²
Shielding	Unshielded
Bending radius	
Flexible use	> 10 x cable diameter
Stationary position	> 5 x cable diameter
Bending cycles	≥ 4,000,000
Reference voltage	≤ 250 V
Rated impulse voltage	2.5 kV
Current loading	4 A
Signal type	Sensor/actuator cable
Torsion force	180° / 1 m
Application	Hygienic and washdown zones Drag chain operation

[1] Silicone-free, halogen-free, LABS-free.

[2] Tested detergent: P3-topactive DES, P3-topactive 200, P3-topax 52, P3-topax 66 und P3-topax 91.

Note	This product is generally resistant to chemical cleaning agents (see ECOLAB) and other chemical compounds such as H2O2 and CH2O2. Before permanent installation is carried out, the material's resistance to the cleaning agent being used must be checked. [2] Resistant against lactic acid & hydrogen peroxide (H2O2)
Authorizations	Ecolab
Enclosure rating	IP67/ IP69K
Ambient operating temperature	
Flexible use	–25 °C ... +105 °C
Stationary position	–40 °C ... +105 °C

[1] Silicone-free, halogen-free, LABS-free.

[2] Tested detergent: P3-topactive DES, P3-topactive 200, P3-topax 52, P3-topax 66 und P3-topax 91.

Classifications

ECl@ss 5.0	19030312
ECl@ss 5.1.4	19030312
ECl@ss 6.0	27060304
ECl@ss 6.2	27060304
ECl@ss 7.0	27060304
ECl@ss 8.0	27060304
ECl@ss 8.1	27060304
ECl@ss 9.0	27060304
ECl@ss 10.0	27060304
ECl@ss 11.0	27060304
ETIM 5.0	EC000830
ETIM 6.0	EC000830
ETIM 7.0	EC003249
UNSPSC 16.0901	26121604

Dimensional drawing (Dimensions in mm (inch))

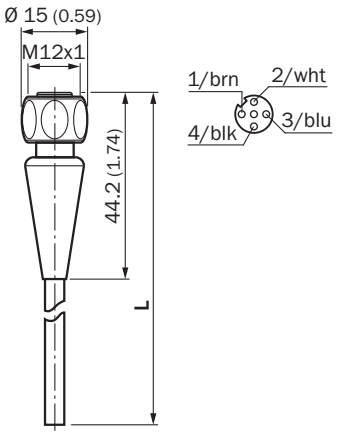

SICK AT A GLANCE

SICK is one of the leading manufacturers of intelligent sensors and sensor solutions for industrial applications. A unique range of products and services creates the perfect basis for controlling processes securely and efficiently, protecting individuals from accidents and preventing damage to the environment.

We have extensive experience in a wide range of industries and understand their processes and requirements. With intelligent sensors, we can deliver exactly what our customers need. In application centers in Europe, Asia and North America, system solutions are tested and optimized in accordance with customer specifications. All this makes us a reliable supplier and development partner.

Comprehensive services complete our offering: SICK LifeTime Services provide support throughout the machine life cycle and ensure safety and productivity.

For us, that is "Sensor Intelligence."

WORLDWIDE PRESENCE:

Contacts and other locations –www.sick.com

SICK
Sensor Intelligence.