Product datasheet
Characteristics

XMLBM03R2S12EX
vacuum switch XMLB - 200 mbar - adjustable scale 2 thresholds - 1 C/O

Main

Range of product	OsiSense ATEX D
Pressure sensor type	Electromechanical vacuum sensor
Product specific application	ATEX D
Pressure sensor name	XMLB
Electrical circuit type	Control circuit
Pressure switch type of operation	Regulation between 2 thresholds
Scale type	Adjustable differential
Pressure sensor size	0.2 bar
Local display	With
Fluid connection type	G 1/4 (female) conforming to ISO 228
Adjustable range of switching point on falling pressure	-0.2…-0.02 bar
Adjustable range of switching point on rising pressure	-0.182…-0.002 bar
Possible differential maximum at high setting	0.18 bar
Maximum permissible accidental pressure	2 bar
Destruction pressure	3.5 bar
Pressure actuator	Diaphragm
Controlled fluid	Air (0…70 °C) Hydraulic oil (0…70 °C) Water (0…70 °C)
Materials in contact with fluid	Steel FPM, FKM Stainless steel
Enclosure material	Zinc alloy

Disclaimer: This documentation is not intended as a substitute for and is not to be used for determining suitability or reliability of these products for specific user applications

Complementary

Maximum permissible pressure - per cycle	1 bar
Cable entry number	1 tapped entry for M20 x 1.5 cable gland (included)
Terminal block type	4 terminals
Repeat accuracy	2 %
Auxiliary contacts operation	Snap action
Contacts material	Silver contacts
Mechanical durability	3000000 cycles
Setting	External
Terminals description ISO n°1	(13-14-11-12)OF
Height	145 mm
Depth	155.5 mm
Width	150 mm

Environment

Standards	EN/IEC 60079-0 EN/IEC 60079-31
Directives	2014/34/EU - ATEX directive
Product certifications	INERIS 04ATEX0058 IEC-Ex INE 17.0019
Marking	II2 D-Ex tb IIIC T85°C Db IP66
Protective treatment	TC
Ambient air temperature for operation	-20…60 °C
Operating position	Any position

Offer Sustainability

Sustainable offer status	Green Premium product
EU RoHS Directive	Pro-active compliance (Product out of EU RoHS legal scope) EU RoHS Declaration
Mercury free	Yes
RoHS exemption information	Yes
Environmental Disclosure	Product Environmental Profile
Circularity Profile	No need of specific recycling operations

Contractual warranty

Warranty	18 months

Dimensions

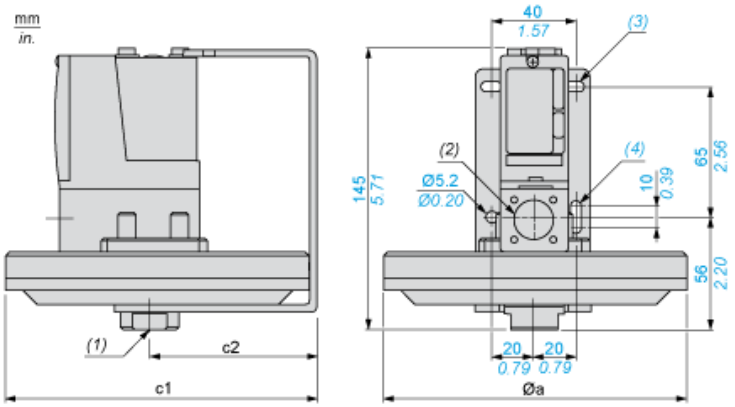

Ø a =	150
c1 =	155.5
c2 =	80.5
(1)	1 fluid entry, tapped G1/4 (BSP female)
(2)	1 electrical connections entry, tapped M20 x 1.5
(3)	2 elongated holes Ø 10.2 x 5.2
(4)	1 elongated hole Ø 15.2 x 5.2

Wiring Diagram

Terminal Model

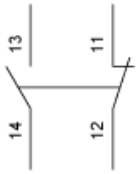

Operating Curves

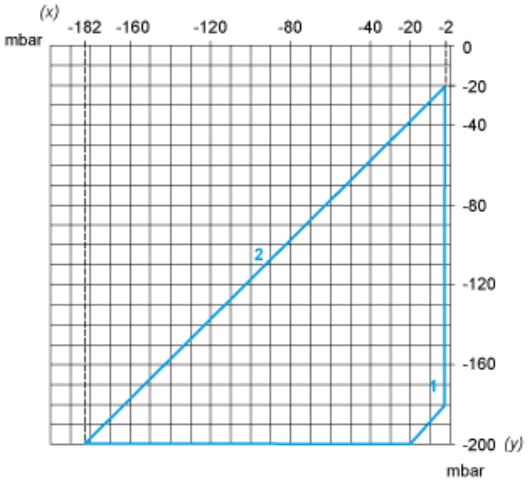

(x) Rising pressure
(y) Falling pressure
1 : Maximum differential
2 : Minimum differential

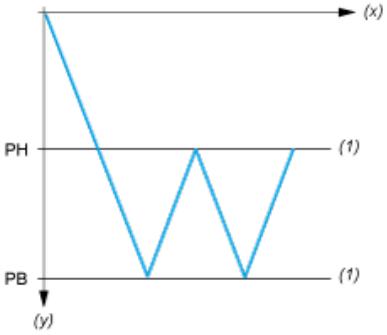

(x) Time
(y) Vacuum
(1) Adjustable value
PH : High point
PB : Below point