Product data sheet
Characteristics

XMLP060BD29Q
pressure transmitter - XMLP - 60bars - 7/16 female - 4..20mA - M12 - set of 40

Main

Range of product	OsiSense XM
Product or component type	Electronic pressure sensors
Pressure sensor type	Pressure transmitter
Pressure sensor name	XMLP
Electrical circuit type	Control circuit
Pressure sensor size	60 bar
Local display	Without
Controlled fluid	Refrigeration fluid -30...120 °C Gas -30...120 °C Hydraulic oil -30...120 °C Air -30...120 °C Fresh water 0...120 °C
Fluid connection type	SAE 7/16-20UNF-2B (female)
Electrical connection	1 male connector M12 4 pins
[Us] rated supply voltage	12...24 V DC SELV, voltage limits: 8...30 V
Current consumption	< 20 mA
Type of output signal	Analogue
Analogue output function	4...20 mA, 2-wire
Quantity per set	Set of 40
Type of packing	Group

Complementary

Pressure setting range	0...60 bar
Maximum permissible accidental pressure	120 bar
Destruction pressure	480 bar
Materials in contact with fluid	Stainless steel type 17-4PH Stainless steel type AISI 304
Operating position	Any position
Protection type	Load short-circuit Reverse polarity
Electromagnetic compatibility	Electrostatic discharge immunity test conforming to EN/IEC 61000-4-2 - test level 8 kV air, 4 kV contact Radiated RF fields conforming to EN/IEC 61000-4-6 - test level 10 V (f = 0.15...80 MHz) 1.2/50 µs shock waves immunity test conforming to EN/IEC 61000-4-5 - test level 500 V 12 Ohm, 1 kV 42 Ohm Electrical fast transient/burst immunity test conforming to EN/IEC 61000-4-4 - test level 2 kV Susceptibility to electromagnetic fields conforming to EN/IEC 61000-4-3 - test level 10 V/m (f = 80...1000 MHz)
[Uimp] rated impulse withstand voltage	0.5 kV
Response time on output	< 5 ms
Measurement accuracy	+/- 0.5 % of the measuring range
Repeat accuracy	+/- 0.1 % of the measuring range
Mechanical durability	>= 10000000 cycles
Product weight	0.05 kg
Diameter	30 mm
Length	26 mm

The information provided in this documentation contains general descriptions and/or technical characteristics of the performance of the products contained herein.
This documentation is not intended as a substitute for and is not to be used for determining suitability or reliability of these products for specific user applications.
It is the duty of any such user or integrator to perform the appropriate and complete risk analysis, evaluation and testing of the products with respect to the relevant specific application or use thereof.
Neither Schneider Electric Industries SAS nor any of its affiliates or subsidiaries shall be responsible or liable for misuse of the information contained herein.

Environment

Standards	CE EN/IEC 61326-1
Product certifications	CULus RCM EAC
Protective treatment	TC
Ambient air temperature for operation	-30...100 °C
Ambient air temperature for storage	-30...100 °C
Vibration resistance	20 gn (f = 10...2000 Hz) conforming to EN/IEC 60068-2-64
Shock resistance	25 gn for 11 ms conforming to EN/IEC 60068-2-27
IP degree of protection	IP69K conforming to DIN 40050 IP67 conforming to EN/IEC 60529 IP65 conforming to EN/IEC 60529

Offer Sustainability

Sustainable offer status	Not Green Premium product
RoHS (date code: YYWW)	Compliant - since 1136 - Schneider Electric declaration of conformity

XMLP060BD29Q

Dimensions

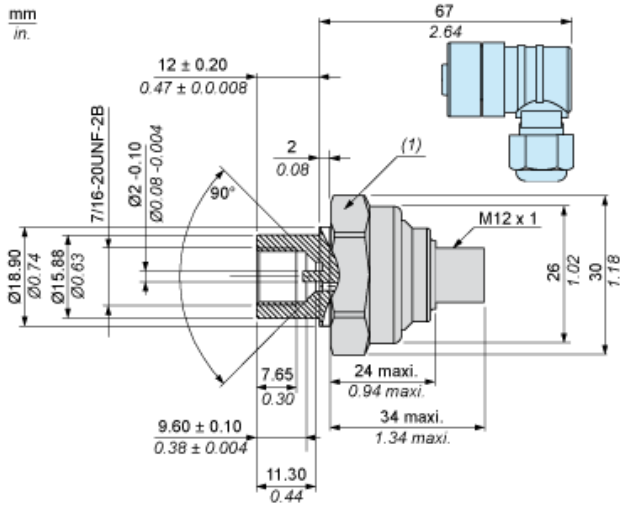

(1) SW27 Tightening torque ≤ 25 Nm / 221 Lb-in

Wiring Diagram

2-Wire Technique (4-20 mA)

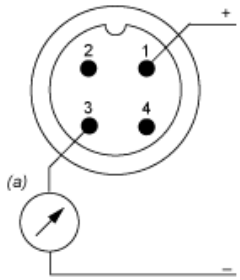

(a) I out

XMLP060BD29Q
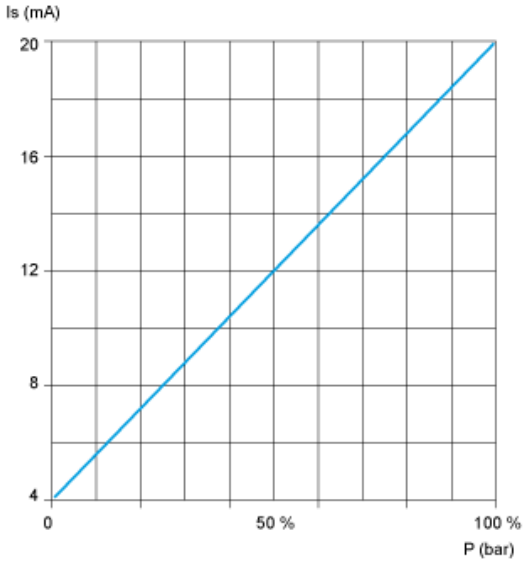
Curves